Dec.1.2025 Copyright 2025 HIROSE ELECTRIC CO., LTD. All Rights Reserved.
In case of consideration for using Automotive equipment / device which demand high reliability, kindly contact our sales window correspondents.

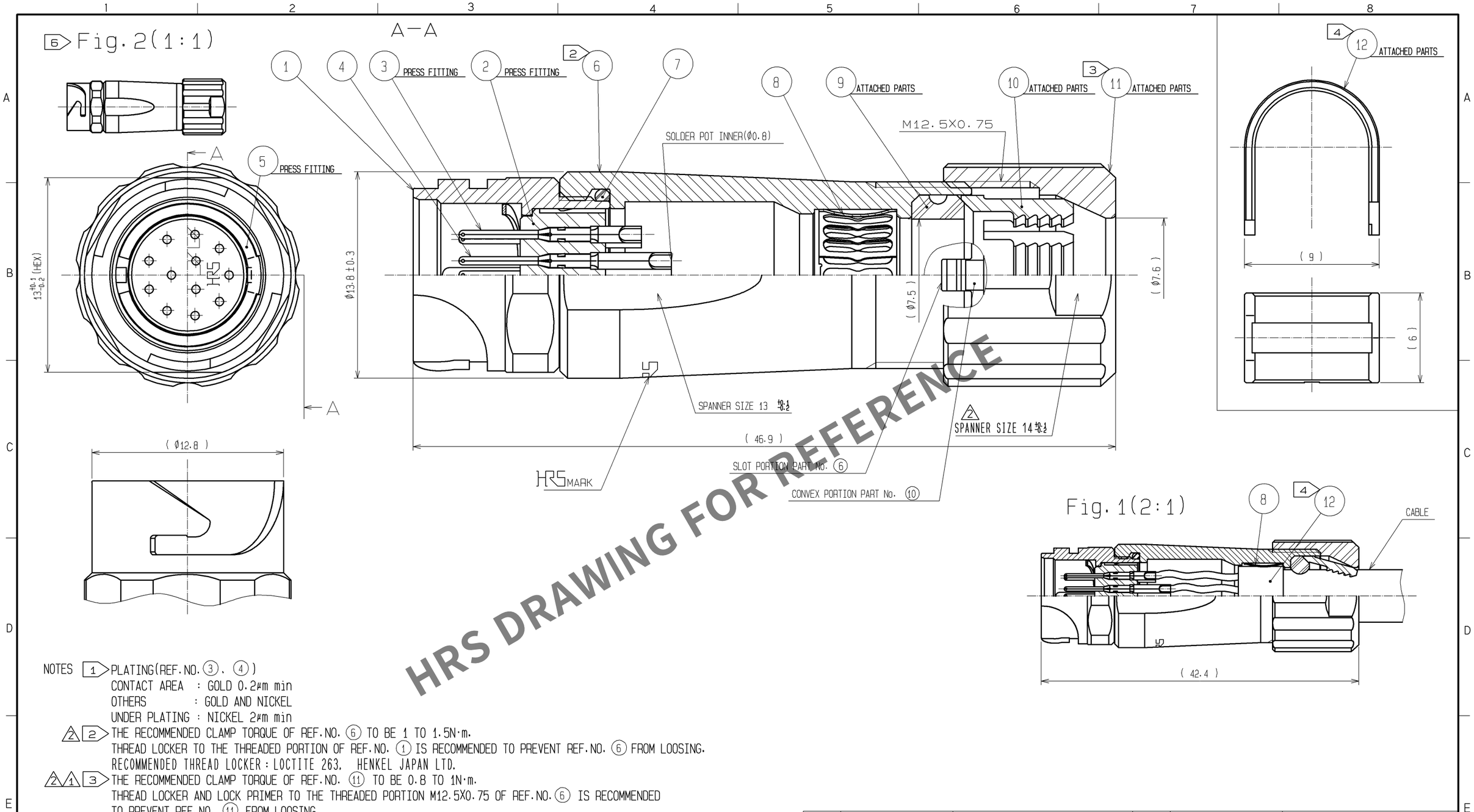

HRS DRAWING FOR REFERENCE

NOTES

1 PLATING(REF.NO. 3 , 4)
CONTACT AREA : GOLD 0.2μm min
OTHERS : GOLD AND NICKEL
UNDER PLATING : NICKEL 2μm min

2 2 THE RECOMMENDED CLAMP TORQUE OF REF.NO. 6 TO BE 1 TO 1.5N·m.
THREAD LOCKER TO THE THREADED PORTION OF REF.NO. 1 IS RECOMMENDED TO PREVENT REF.NO. 6 FROM LOOSING.
RECOMMENDED THREAD LOCKER : LOCTITE 263, HENKEL JAPAN LTD.

2 1 3 THE RECOMMENDED CLAMP TORQUE OF REF.NO. 11 TO BE 0.8 TO 1N·m.
THREAD LOCKER AND LOCK PRIMER TO THE THREADED PORTION M12.5X0.75 OF REF.NO. 6 IS RECOMMENDED TO PREVENT REF.NO. 11 FROM LOOSING.
RECOMMENDED THREAD LOCKER AND LOCK PRIMER : LOCTITE 263, LOCK PRIMER 7649, HENKEL JAPAN LTD.

4 FASTEN REF.NO. 12 TO THE CABLE WITH THE CABLE CRIMPING TOOL.
AND MAKE REF.NO. 12 CONTACT WITH REF.NO. 8 (REFER TO Fig.1).
REFER TO THE TECHNICAL SPECIFICATION ATAD-C0099 FOR DETAILS.
APPLICABLE CABLE CRIMPING TOOL : LF-TC-01 (CL150-0234-6)

5 APPLICABLE CABLE ASSEMBLY FIXTURE : LF10BJ-T01 (CL150-0236-1)
CABLE ASSEMBLY FIXTURE IS USED AS A RECEPTACLE STAND OF EXTRACT AND THE PART NUMBER 1 OF AN ASSEMBLY.

6 Fig.2 SHOWS THE APPEARANCE AFTER ASSEMBLY.

7 ROTATION EXAMPLES OF REF. NOS. 6 AND 11 TO 1 ARE SHOWN.

2 8 CABLE PULL FORCE, TWISTING STRENGTH, WATER TIGHTNESS AND OTHER CHARACTERISTICS MAY DIFFER DEPENDING ON CABLE SPECIFICATIONS AND STRUCTURE.
PLEASE EVALUATE UNDER THE ACTUAL CONDITIONS PRIOR TO USE.

NO.	MATERIAL	FINISH , REMARKS	NO.	MATERIAL	FINISH , REMARKS
6	ZINC ALLOY	NICKEL PLATING	12	BRASS	NICKEL PLATING
5	PHOSPHOR BRONZE	NICKEL PLATING	11	PPS	(NATURAL, BROWN) UL94V-0
4	COPPER ALLOY	1	10	POLYAMIDE	(NATURAL, MILKY WHITE) UL94V-0
3	COPPER ALLOY	1	9	CHLOROPRENE RUBBER	(BLACK)
2	PPS	(BLACK) UL94V-0	8	PHOSPHOR BRONZE	NICKEL PLATING
1	ZINC ALLOY	NICKEL PLATING	7	CHLOROPRENE RUBBER	(BLACK)

UNITS	SCALE	COUNT	DESCRIPTION OF REVISIONS	DESIGNED	CHECKED	DATE
mm	4 : 1	2 4	DIS-C-003545	KN. IKEHARA	EJ. KUNII	14.07.18

HRS HIROSE ELECTRIC CO., LTD.

APPROVED	: MR. YOSHIDA	05.01.05	DRAWING NO.	EDC3-114250-00
CHECKED	: MO. SATOH	05.01.05	PART NO.	LF10WBJ-12P
DESIGNED	: YH. YAMADA	05.01.05	CODE NO.	CL136-2007-9-00
DRAWN	: YH. YAMADA	05.01.05		2 1/1

FORM HC0011-5-7