Jan.1.2026 Copyright 2026 HIROSE ELECTRIC CO., LTD. All Rights Reserved.
In case of consideration for using Automotive equipment / device which demand high reliability, kindly contact our sales window correspondents.

5 Fig.2(1:1)

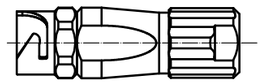

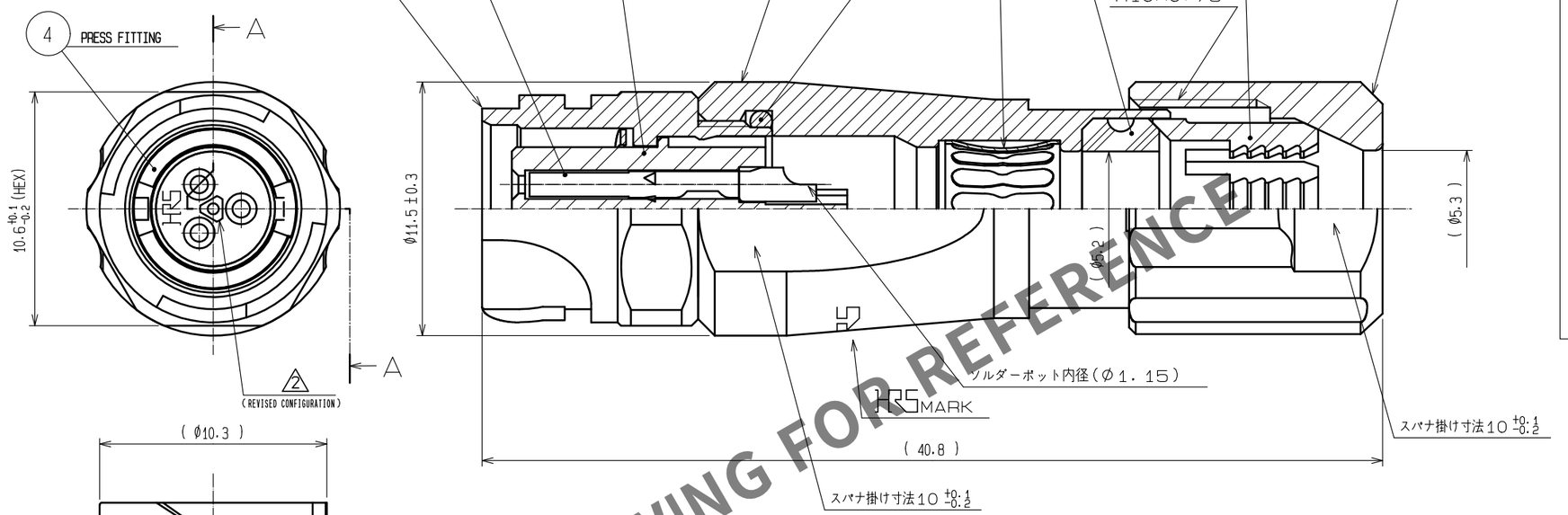

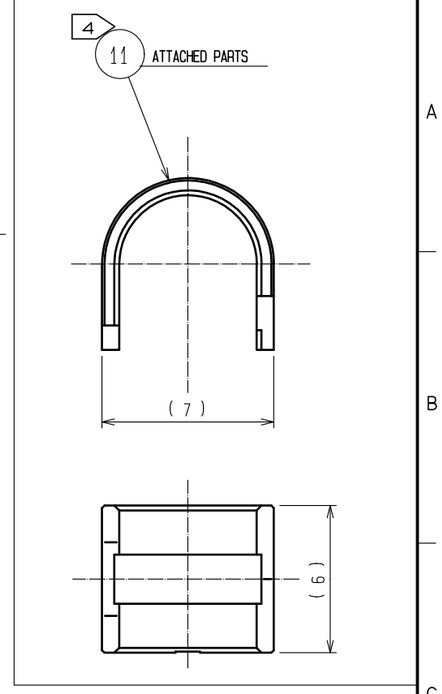

Fig.1(2:1)

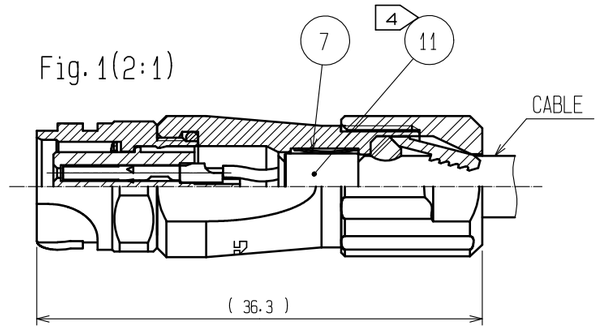

HRS DRAWING FOR REFERENCE

NOTES
1 PLATING(REF.NO.③)
CONTACT AREA : GOLD 0.2μm min
OTHERS : GOLD AND NICKEL
UNDER PLATING : NICKEL 2μm min
2 THE RECOMMENDED CLAMP TORQUE OF REF.NO.⑤ TO BE 1 TO 1.5N·m.
THREAD LOCKER TO THE THREADED PORTION OF REF.NO.① IS RECOMMENDED TO PREVENT REF.NO.⑤ FROM LOOSING.
2 RECOMMENDED THREAD LOCKER:LOCTITE 263, HENKEL JAPAN LTD.
3 THE RECOMMENDED CLAMP TORQUE OF REF.NO.⑩ TO BE 0.8 TO 1N·m.
THREAD LOCKER AND LOCK PRIMER TO THE THREADED PORTION M10X0.75 OF REF.NO.⑤ IS RECOMMENDED TO PREVENT REF.NO.⑩ FROM LOOSING.
2 RECOMMENDED THREAD LOCKER AND LOCK PRIMER : LOCTITE 263, LOCK PRIMER 7649, HENKEL JAPAN LTD.
4 FASTEN REF.NO.⑪ TO THE CABLE WITH THE CABLE CRIMPING TOOL.
AND MAKE REF.NO.⑪ CONTACT WITH REF.NO.⑦ (REFER TO Fig.1).
REFER TO THE TECHNICAL SPECIFICATION ATAD-C0099 FOR DETAILS.
APPLICABLE CABLE CRIMPING TOOL : HR10A-TC-02(CL150-0041-2)(THE HOLE DIAMETER FOR CRIMPING:Ø5.3)
5 Fig.2 SHOWS THE APPEARANCE AFTER ASSEMBLY.
6 ROTATION EXAMPLES OF REF. NOS.⑤ AND⑩ TO ① ARE SHOWN.
7 APPLICABLE CABLE ASSEMBLY FIXTURE : LF07BJ-T01(CL150-0233-3)
CABLE ASSEMBLY FIXTURE IS USED AS A RECEPTACLE STAND OF EXTRACT AND THE PART No.① OF AN ASSEMBLY.

NO.	MATERIAL	FINISH , REMARKS		NO.	MATERIAL	FINISH , REMARKS	
6	CHLOROPRENE RUBBER	(BLACK)					
5	ZINC ALLOY	NICKEL PLATING		11	BRASS	NICKEL PLATING	
4	PHOSPHOR BRONZE	NICKEL PLATING		10	PPS	(NATURAL, BROWN)	UL94V-0
3	COPPER ALLOY	1		9	POLYAMIDE	(NATURAL, MILKY WHITE)	UL94V-0
2	PPS	(BLACK)	UL94V-0	8	CHLOROPRENE RUBBER	(BLACK)	
1	ZINC ALLOY	NICKEL PLATING		7	PHOSPHOR BRONZE	NICKEL PLATING	

UNITS	SCALE		COUNT	DESCRIPTION OF REVISIONS	DESIGNED	CHECKED	DATE
mm	4 : 1	2	3	DIS-C-00001700	HY. KISHI	HY. KOBAYASHI	17.08.11

HRS HIROSE ELECTRIC CO., LTD.

APPROVED	: MR. YOSHIDA	05.01.05
CHECKED	: MO. SATOH	05.01.05
DESIGNED	: YH. YAMADA	05.01.05
DRAWN	: YH. YAMADA	05.01.05

DRAWING NO. EDC3-114151-00
PART NO. LF07WBJ-3S
CODE NO. CL136-2004-0-00
2 1/1

FORM HC0011-5-7