Feb.1.2026 Copyright 2026 HIROSE ELECTRIC CO., LTD. All Rights Reserved.
In case of consideration for using Automotive equipment / device which demand high reliability, kindly contact our sales window correspondents.

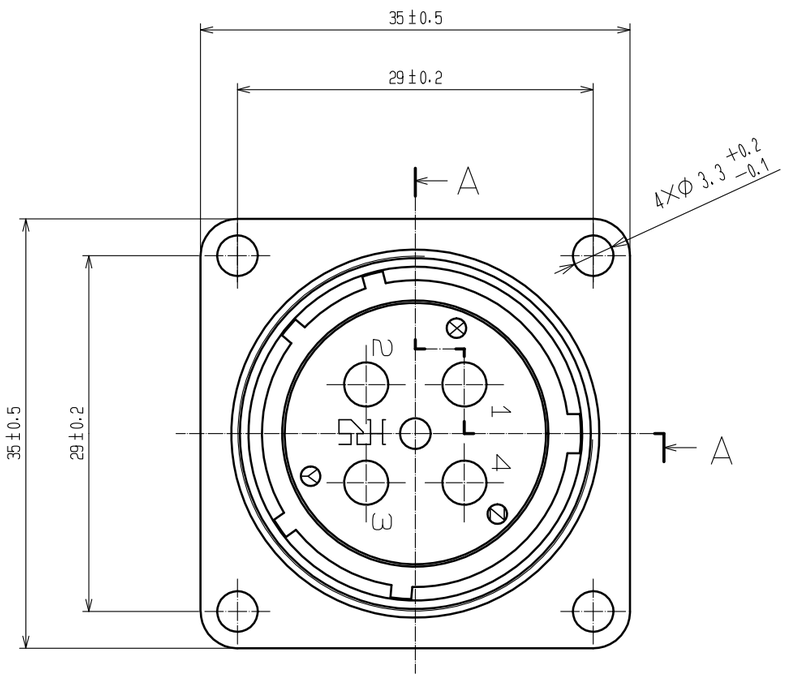

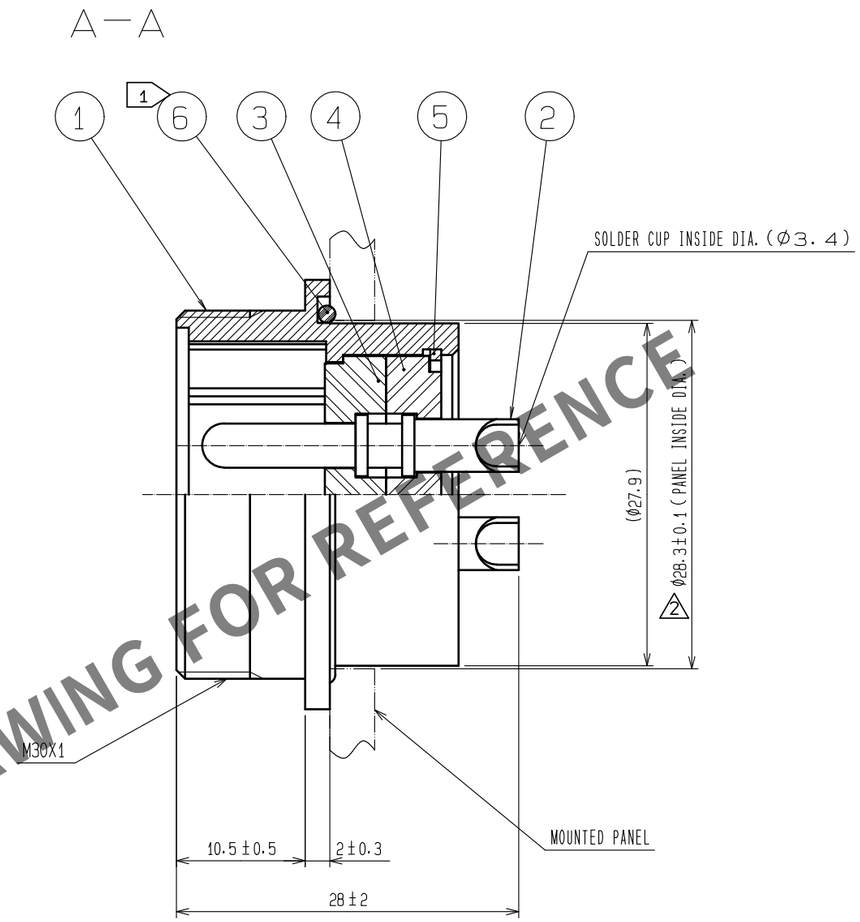

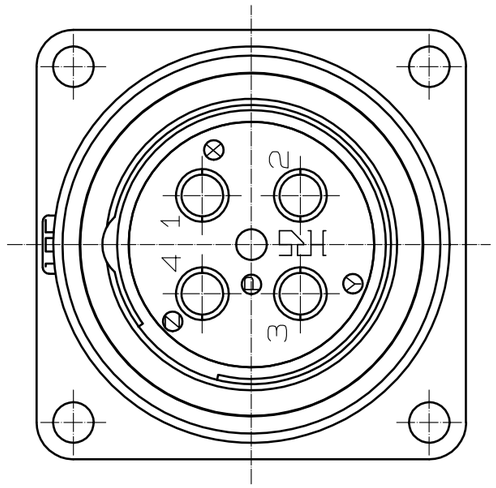

HRS DRAWING FOR REFERENCE

NOTES
1. WHEN MOUNTED ON CHASSIS, BE CAREFUL THAT REF. NO. ⑥ IS FITTED INTO THE INDICATES GROOVE ANY BITING.
2. ROTATIONAL DIRECTION OF THE SOLDER CUP OF REF. NO. ② SHOWS AN EXAMPLE.
3. UL certified product(E52653).

NO.	MATERIAL	FINISH , REMARKS	NO.	MATERIAL	FINISH , REMARKS
3	POLYPHENYLENE SULFIDE	(BLACK) UL94V-0	6	SILICONE RUBBER	(BLACK)
2	BRASS	SILVER PLATING 5μm min. △2	5	PHOSPHOR BRONZE	NICKEL PLATING
1	ALUMINUM ALLOY	BLACK CHROME PLATING	4	POLYPHENYLENE SULFIDE	(BLACK) UL94V-0

UNITS	SCALE		COUNT	DESCRIPTION OF REVISIONS	DESIGNED	CHECKED	DATE
mm	2 : 1	△2	2	DIS-C-00009599	HR. SATO	EJ. KUNII	20220107

HRS HIROSE ELECTRIC CO., LTD.

APPROVED	: EJ. KUNII	20130130	DRAWING NO.	EDC3-118064-00
CHECKED	: HY. KISHI	20130130	PART NO.	JR25WRH-4P
DESIGNED	: HK. NAMAI	20130129	CODE NO.	CL0114-2184-7-00 △2 1/1
DRAWN	: HK. NAMAI	20130129		

FORM HC0011-5-7