Jan.1.2026 Copyright 2026 HIROSE ELECTRIC CO., LTD. All Rights Reserved.
In case of consideration for using Automotive equipment / device which demand high reliability, kindly contact our sales window correspondents.

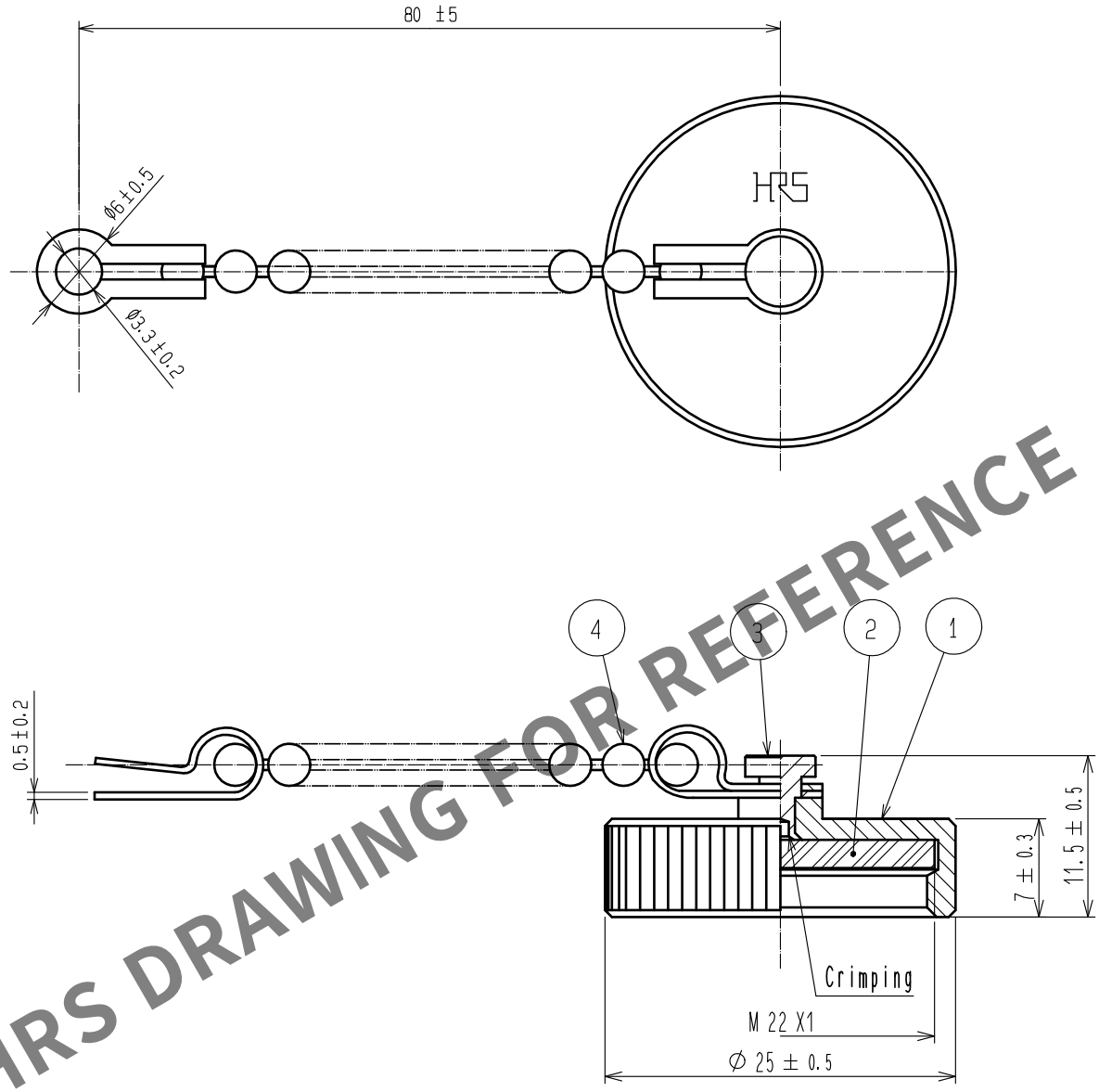

HRS DRAWING FOR REFERENCE

Note 1 Recommended tightening torque when installing the product in the receptacle: 1.2~2 N・m
2 This Product is a cap for JR※16WR※-※(※)
It is Applicable regardless of given alphabets and/or number shown at ※

部番	材質	処理，備考	部番	材質	処理，備考
2	Silicon rubber	(Black)	4	Stainless	
1	Brass	Black chrome plating	3	Brass	Chrome plating

UNITS mm	SCALE 2 : 1	△の数	訂正記事	設計	検図	年月日
		0				

HRS HIROSE ELECTRIC CO., LTD.

承認	TP. KOMATSU	20250805	図番：	EDC-115781-00-00
検図	HN. TANAKA	20250805	製品名：	JR16WRC3
設計	DS. UZAKI	20250805	製品コード	CL0114-2171-5-00
製図	DS. UZAKI	20250805		0 1/1

FORM HC0011-5-1