Oct.1.2025 Copyright 2025 HIROSE ELECTRIC CO., LTD. All Rights Reserved.
In case of consideration for using Automotive equipment / device which demand high reliability, kindly contact our sales window correspondents.

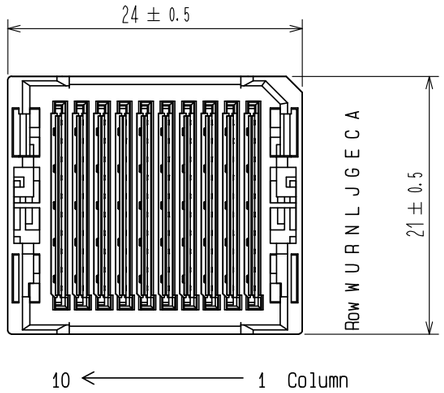

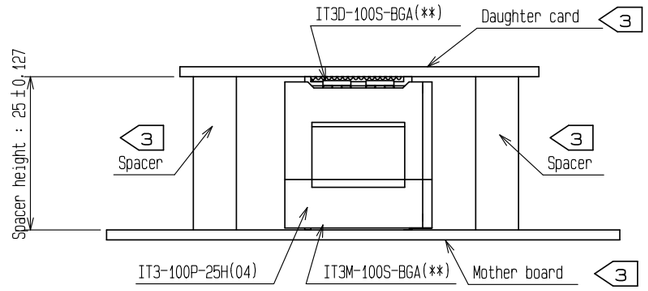

Fig.1(FREE)

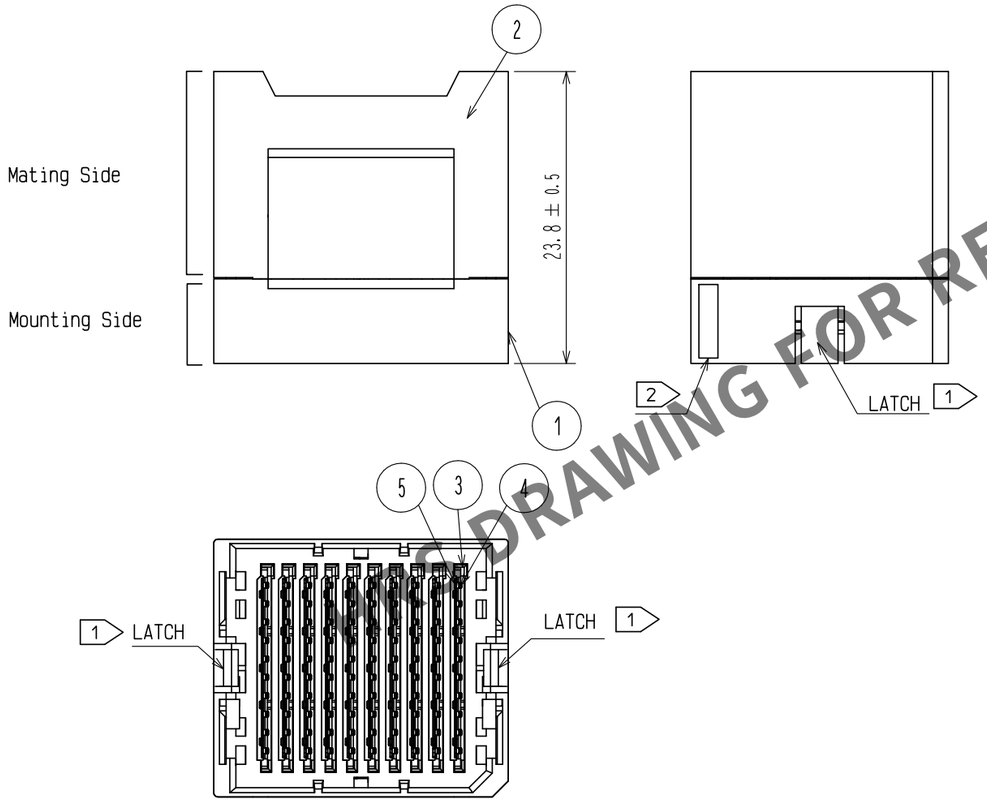

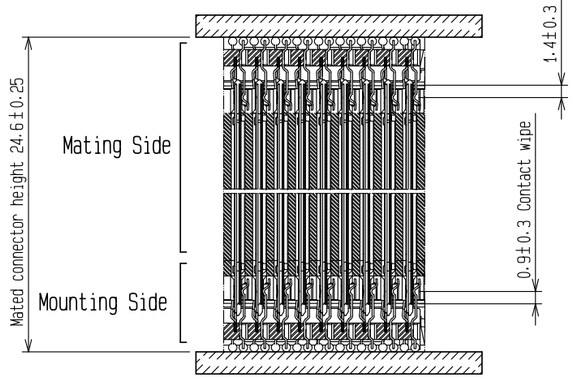

Mating Cross Section (Free)

NPI DRAWING FOR REFERENCE

NOTE.
1. Mounting side is mated with the receptacle:IT3M-100S-BGA(**) and fixed with the latch.
2. Lot No. shall be marked on the indicated position.
3. The indicated mother board and daughter card shall be fastened to the additional reinforcements to prevent the stress on IT3*-100S-BGA(**) solder joints.
4. Please refer to HIROSE document: ETAD-F0347 'IT3 design guideline'.
5. This product consists of 100 signal lines and 90 ground lines.
6. 50pcs of this products are packed in a soft tray.
7. Standard package of 100pcs are packaged in a carton box.

NO.	MATERIAL	FINISH , REMARKS		NO.	MATERIAL	FINISH , REMARKS
3	LCP	BLACK UL94V-0				
2	PBT	GRAY UL94V-0		5	Copper Alloy	CONTACT AREA:NICKEL(1.5μm)+GOLD (0.76μm)
1	PBT	BLACK UL94V-0		4	Copper Alloy	CONTACT AREA:NICKEL(1.5μm)+GOLD (0.76μm)

UNITS	SCALE	COUNT	DESCRIPTION OF REVISIONS	DESIGNED	CHECKED	DATE
mm	2 : 1	0				

HIROSE ELECTRIC CO., LTD.

APPROVED	: MK. EZAKI	15. 08. 26	DRAWING NO.	EDC-157235-04-00
CHECKED	: MK. EZAKI	15. 08. 26	PART NO.	IT3-100P-25H(04)
DESIGNED	: TF. SUGAWARA	15. 08. 26		
DRAWN	: KT. AIZAWA	15. 08. 26	CODE NO.	CL636-0150-2-04