Jan.1.2026 Copyright 2026 HIROSE ELECTRIC CO., LTD. All Rights Reserved.
In case of consideration for using Automotive equipment / device which demand high reliability, kindly contact our sales window correspondents.

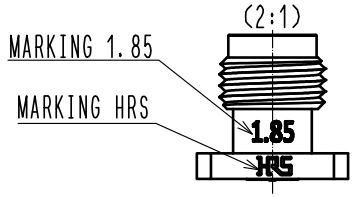

1. PLEASE HOLD THE FLANGE WITH A SPANNER WHEN MATING THE CONNECTOR TO AVOID ANY TORQUE ACTING ON THE PCB. 0-80UNF-2B SCREWS TIGHTENING TORQUE SHOULD BE 0.09N・m.
2. PLEASE TIGHTEN THE SCREWS EVENLY WHEN MOUNTING THE CONNECTORS TO ENSURE STABLE ELECTRICAL CONTACT.
3. PLEASE USE SCREWS WITH LENGTH OF L WHEN MOUNTING. WHERE L = PCB THICKNESS t1 + SPRING WASHER THICKNESS t2 + 2 mm.
4. THE SOLDER MASK PROHIBITED AREA IS INDICATED.
5. PCB THICKNESS t1 SHOULD BE GREATER THAN 1 mm(0.039 in.).
6. LAND PATTERN AND VIA LAYOUT DEPENDS ALSO ON ELECTRIC CONSTANT, THICKNESS AND LAYER CONSTRUCTION OF PCB. FOR BETTER RF PERFORMANCE, EM SIMULATION OF PCB WITH CONNECTOR IS RECOMMENDED.
7. THIS PRODUCT IS A SOLDERLESS MOUNTED CONNECTOR FOR PROTOTYPE EVALUATION OF HIGH SPEED TRANSMISSION BOARDS. IT IS NOT RECOMMENDED FOR USE IN ACTUAL COMMERCIAL EQUIPMENT.

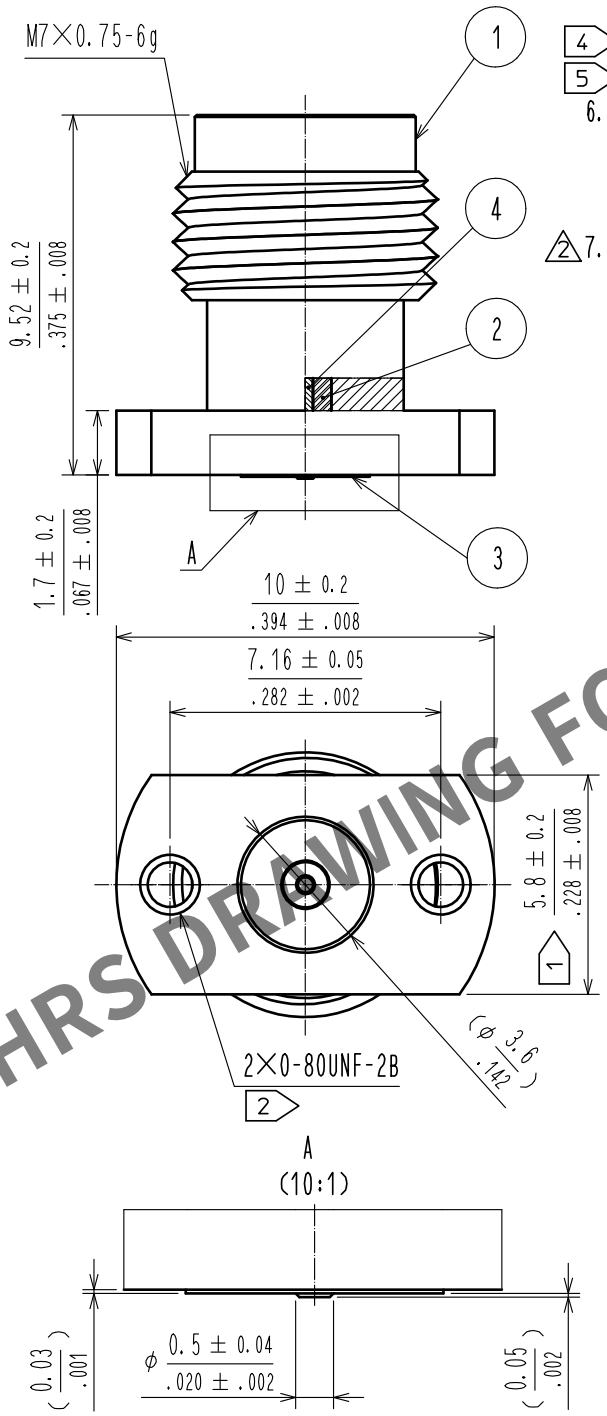

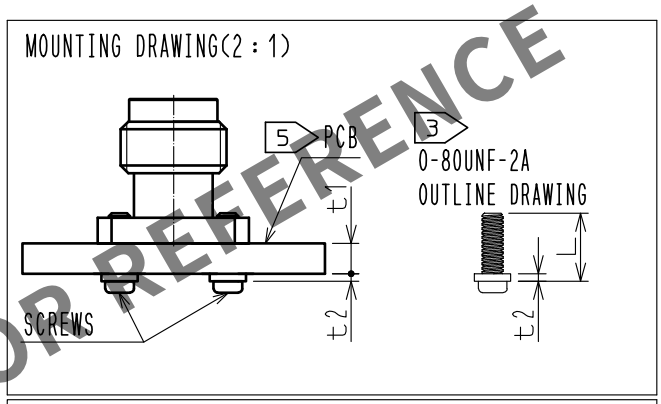

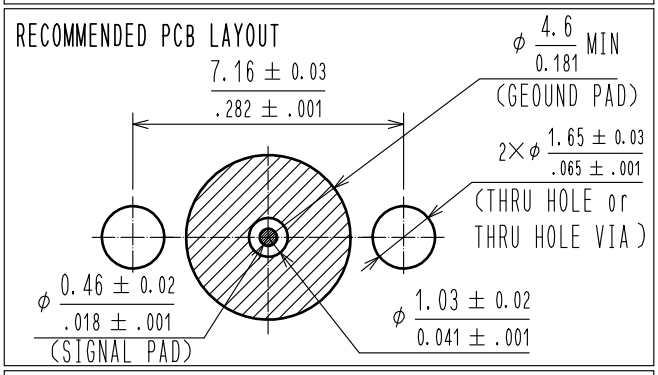

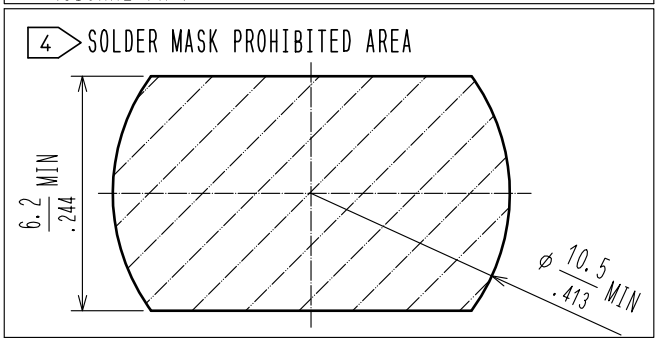

HRS DRAWING FOR REFERENCE

NO.	MATERIAL	FINISH . REMARKS	NO.	MATERIAL	FINISH . REMARKS
2	PTFE		4	BERYLLIUM COPPER	GOLD PLATING
1	STAINLESS STEEL	PASSIVATE	3	STAINLESS STEEL	GOLD PLATING

UNITS mm/inch	SCALE 5 : 1		COUNT	DESCRIPTION OF REVISIONS	DESIGNED	CHECKED	DATE
		2	1	DIS-D-00016663	RO. YOKOYAMA	TS. KANEKO	20230818

HIROSE ELECTRIC CO., LTD.

APPROVED	: TS. NOBE	20181220	DRAWING NO.	EDC-380932-00-00
CHECKED	: MH. OGUSU	20181220	PART NO.	HV-R-SR2
DESIGNED	: AH. MARUYAMA	20181219	CODE NO.	CL0338-0010-0-00
DRAWN	: AH. MARUYAMA	20181219		2 1/1

FORM HC0011-5-51