Nov.1.2026 Copyright 2026 HIROSE ELECTRIC CO., LTD. All Rights Reserved.
In case of consideration for using Automotive equipment / device which demand high reliability, kindly contact our sales window correspondents.

	COUNT	DESCRIPTION OF REVISIONS	BY	CHKD	DATE		COUNT	DESCRIPTION OF REVISIONS	BY	CHKD	DATE
△					. .	△					. .
△					. .	△					. .
△					. .	△					. .

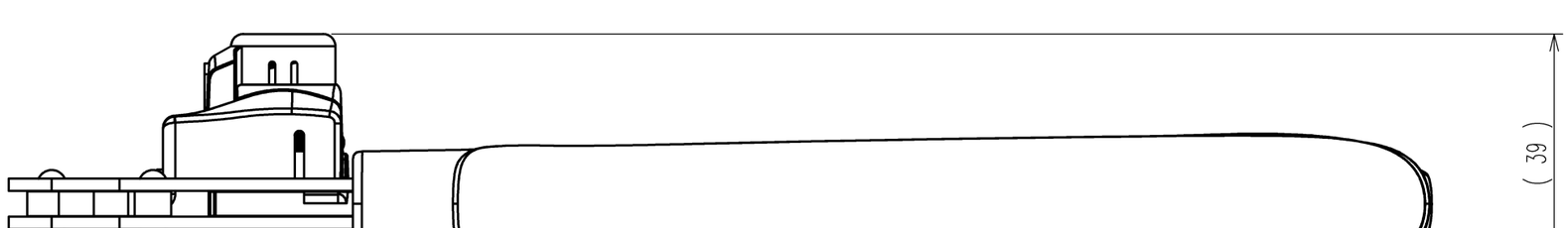

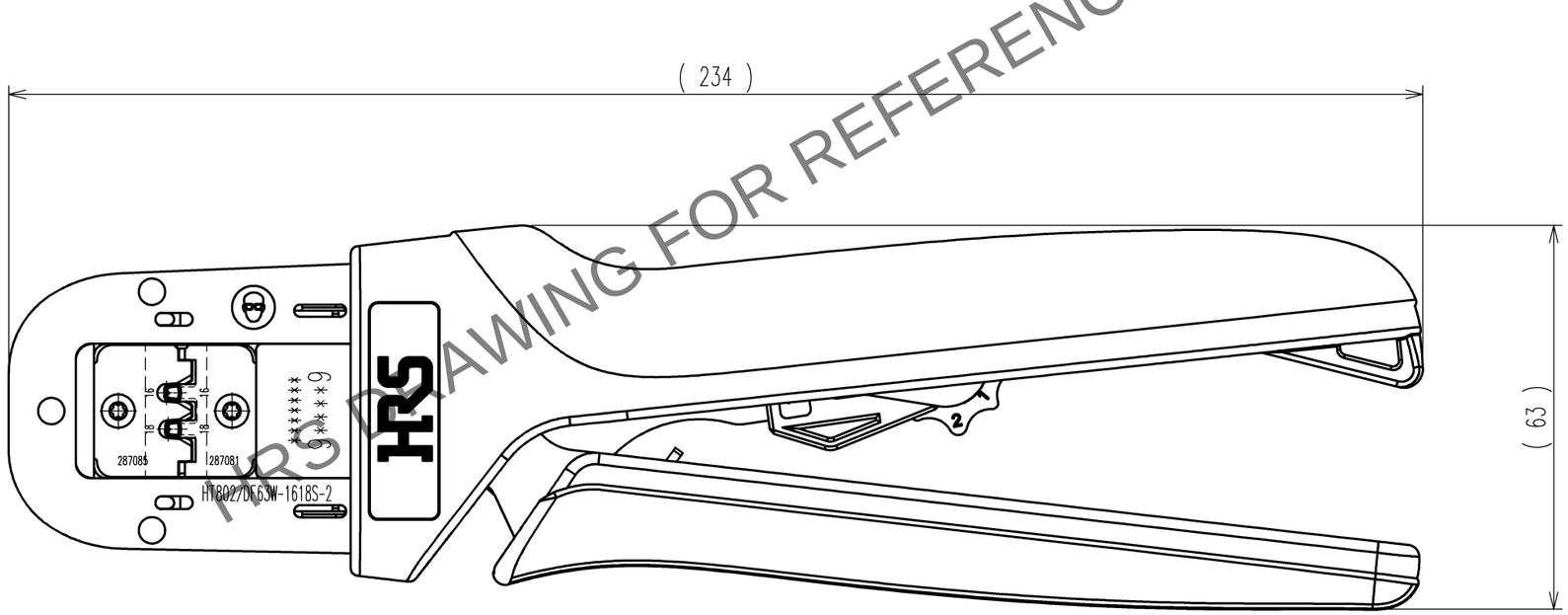

HRS DRAWING FOR REFERENCE

Notes : Contact of DF63W-1618SC(CL680-0601-8) is assembled for this tool.

TO
PE

2			4		
1			3		
NO.	MATERIAL	FINISH, REMARKS	NO.	MATERIAL	FINISH, REMARKS

CODE NO.(OLD) CL	DRAWN	DESIGNED	CHECKED	APPROVED	RELEASED
	H.KUDO 15.7.29	N.SUGITA 15.7.29	S.OIZUMI 15.7.31	T.ITO 15.7.31	. .

SCALE 1 : 1	DRAWING NO. EDC-276492-00-00	PART NO. HT802/DF63W-1618S-2
UNITS mm	HRS HIROSE ELECTRIC CO., LTD	CODE NO. CL550-0426-0 1/1