Jan.1.2026 Copyright 2026 HIROSE ELECTRIC CO., LTD. All Rights Reserved.
In case of consideration for using Automotive equipment / device which demand high reliability, kindly contact our sales window correspondents.

△1 Redraw

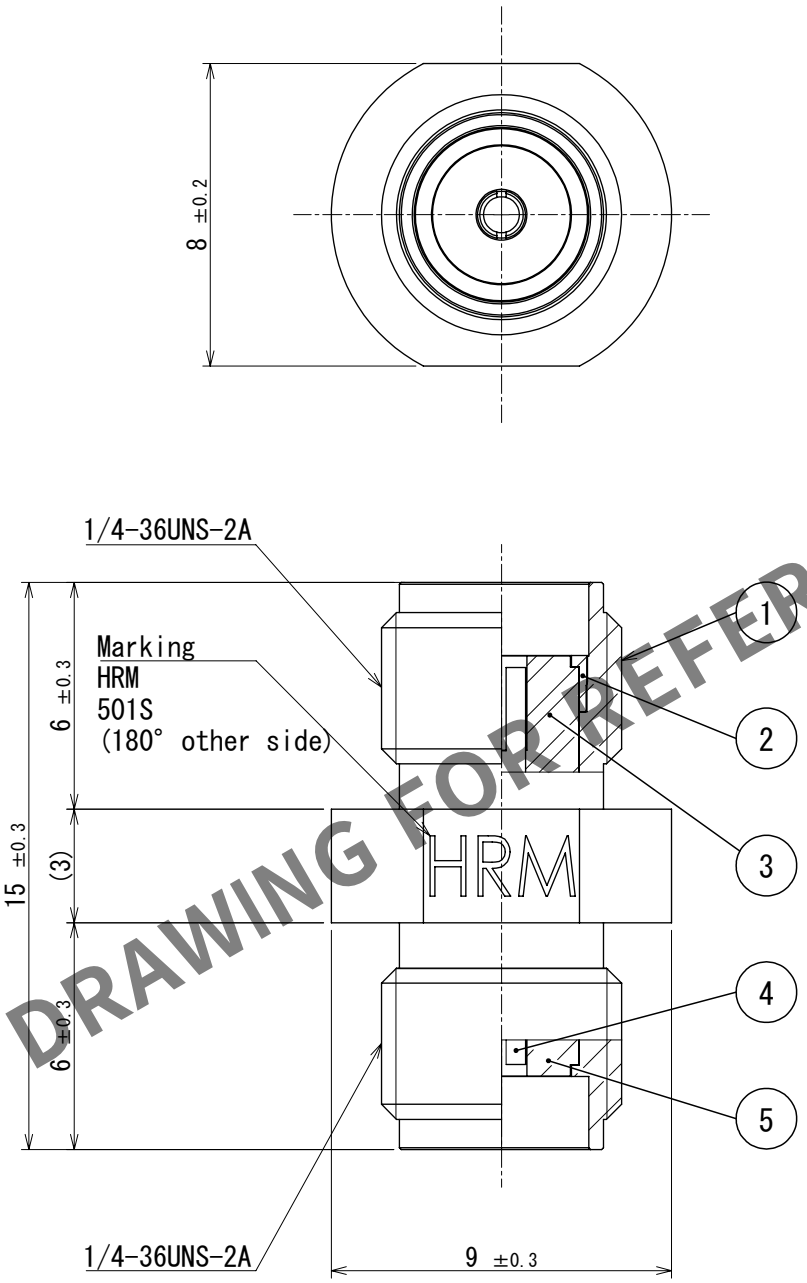

HRS DRAWING FOR REFERENCE

NO.	MATERIAL	FINISH , REMARKS	NO.	MATERIAL	FINISH , REMARKS
3	PTFE				
2	Stainless steel	Passivate	5	PTFE	
1	Stainless steel	Passivate	4	Beryllium copper	Gold plating

UNITS	SCALE	COUNT	DESCRIPTION OF REVISIONS	DESIGNED	CHECKED	DATE
mm	5:1	△1 1	DIS-D-00011925	NK.OOSAWA	NK.NINOMIYA	2022.05.31

HIROSE ELECTRIC CO., LTD.

APPROVED	: IJ.MITANI	2005.01.05
CHECKED	: KY.SHIMIZU	2005.01.05
DESIGNED	: TO.KATAYAMA	2005.01.05
DRAWN	: MH.WATANABE	2005.01.05

DRAWING NO.	EDC-007603-00-00
PART NO.	HRM-501S
CODE NO.	CL0323-0156-8-00 △1 1/1

FORM HC0011-5