Oct.1.2025 Copyright 2025 HIROSE ELECTRIC CO., LTD. All Rights Reserved.
In case of consideration for using Automotive equipment / device which demand high reliability, kindly contact our sales window correspondents.

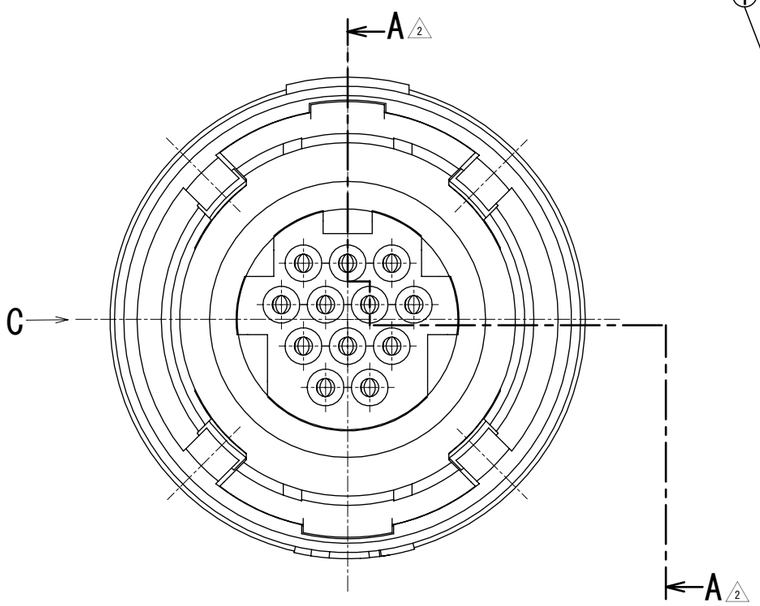

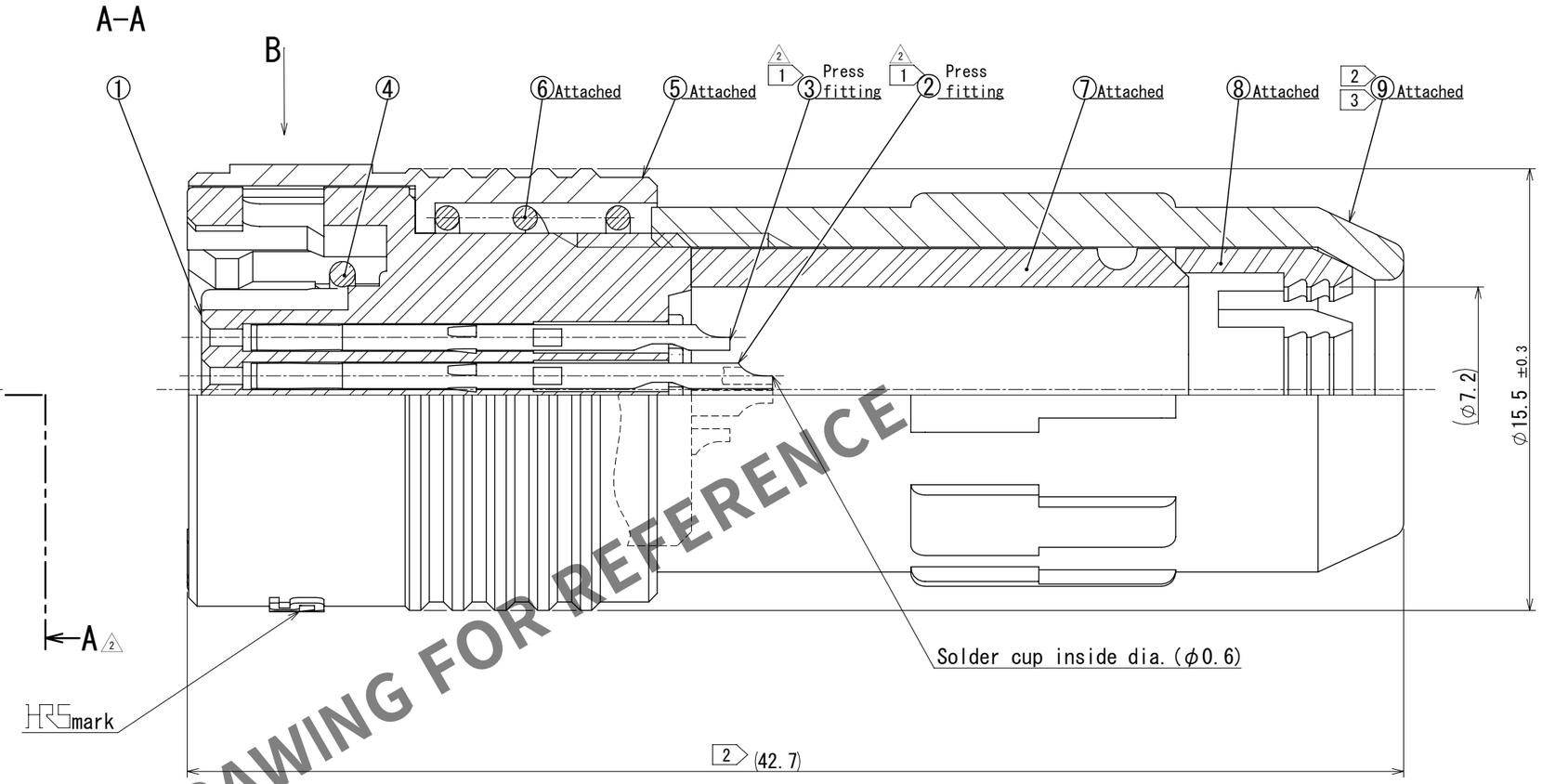

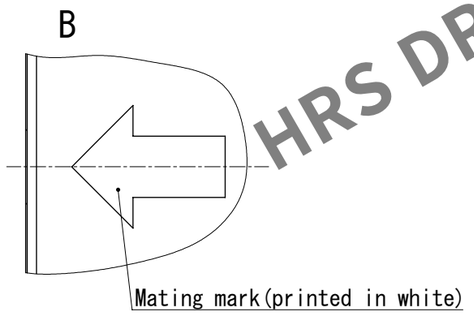

HRS DRAWING FOR REFERENCE

Notes 1 Contact area:gold plating 0.2μm min.
Terminal area:gold plating flash.
Under plating:nickel 2μm min.
2 Total length becomes 39.8±1 when ⑨ is screwed into completery.
3 The recommended clamp torque of Ref.No.⑨ to be 0.45 to 0.5N・m.
To prevent loosening, apply LOCTITE 263 and LOCK PRIMER 7649 manufactured by HENKEL JAPAN Co., Ltd. according to the Loctite Coating Procedure Manual (ETAD-C0151-00).
Spacer for assembly is available HR30-8P-T02.
Table for assembly is available HR30-7P-12SC-T01.
4 The cable pull and twisting strength, waterproof tightness and other characteristics may differ, depending on the cable structure, please confirm before the use.
5 The assembly this product applies to the manual ETAD-C0509-00.

2 CAD change

2 Life size(1:1)

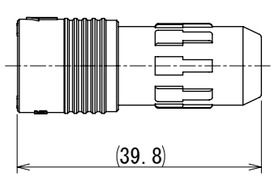

NO.	MATERIAL	FINISH , REMARKS	NO.	MATERIAL	FINISH , REMARKS
5	Polybutylene terephthlate	(Black) UL94V-0			
4	Silicone rubber	(Red)	9	Polyphenylen sulfide	(Black) UL94V-0
3	Copper alloy	1	8	Polyacetal	(Natural:Milky white)
2	Copper alloy	1	7	Chloroprene rubber	(Black)
1	Polyphenylen sulfide	(Black) UL94V-0	6	Stainless steel	

UNITS	SCALE		COUNT	DESCRIPTION OF REVISIONS	DESIGNED	CHECKED	DATE
mm	5:1	2	5	DIS-C-00016204	HY.KISHI	HY.KOBAYASHI	2023.10.10

HRS HIROSE ELECTRIC CO.,LTD.

APPROVED	: MO.SATOH	2007.03.05	DRAWING NO.	EDC-113523-71-71
CHECKED	: EJ.KUNII	2007.03.05	PART NO.	HR30-7P-12S(71)
DESIGNED	: HS.KAWASHIMA	2007.03.05		
DRAWN	: MK.SATO	2007.03.02	CODE NO.	CL0130-0027-7-71

2 1/1

FORM HC0011-5