Feb.1.2026 Copyright 2026 HIROSE ELECTRIC CO., LTD. All Rights Reserved.
In case of consideration for using Automotive equipment / device which demand high reliability, kindly contact our sales window correspondents.

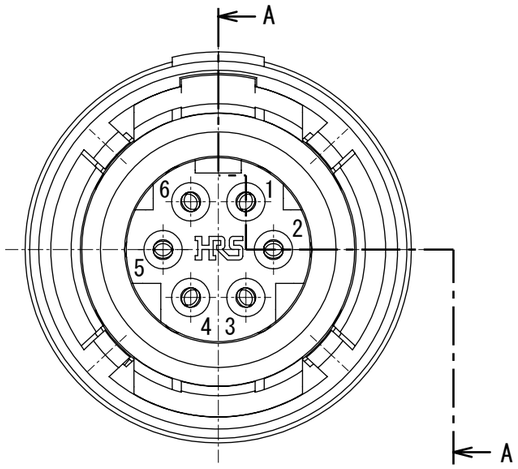

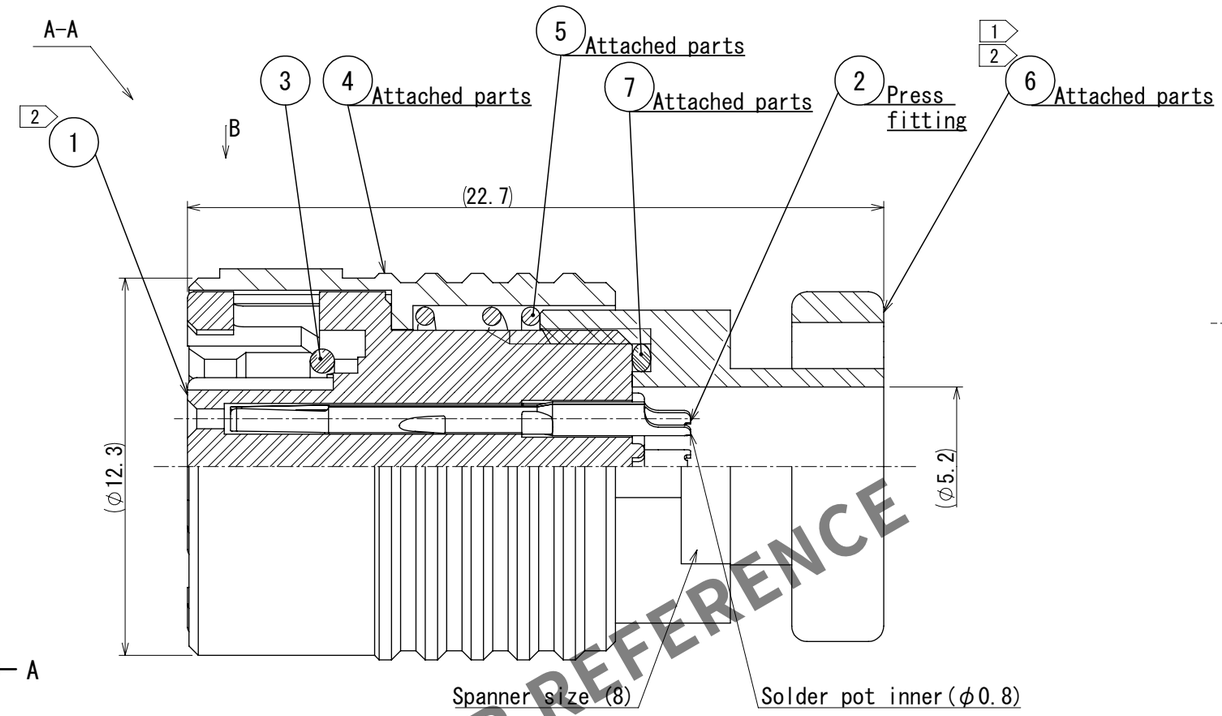

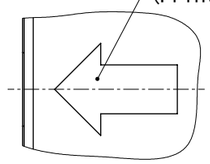

HRS DRAWING FOR REFERENCE

Notes 1 The recommended clump torque of Ref. No. ⑥ is 0.45 to 0.5N・m.
To prevent loosening, apply LOCTITE 263 and LOCK PRIMER 7649 manufactured by HENKEL JAPAN Co., Ltd. according to the Loctite Coating Procedure Manual (ETAD-C0151-00).
2 Rotation examples of Ref. No.① and Ref. No.⑥ are shown.for overmolding note that the position is not always the same.
3 Applicable jig
Solder termination fixture : HR30-6P-6S-T01(CL150-0214-9)
4 When this product assembled, it shall apply to ETAD-C0198 and be overmolded by customer.
Cable clamp strength, waterproof performance and other performance depend on overmold.
We recommended checking the quality before the usage.
5 The molding die for overmolding shall be designed as holding down the area (spanner setting area(8) and circumference of (φ11))as shown in the drawing.

5 Assembly procedure(2:1)

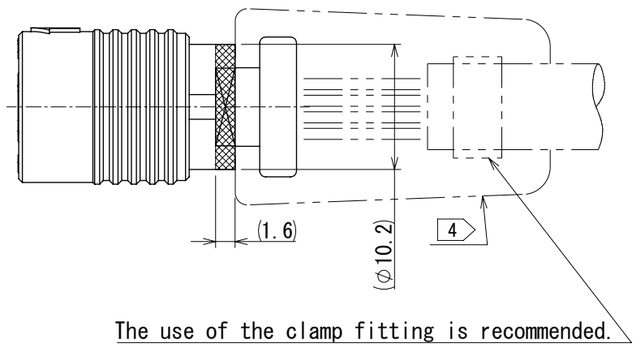

The use of the clamp fitting is recommended.

⑥(2 : 1)

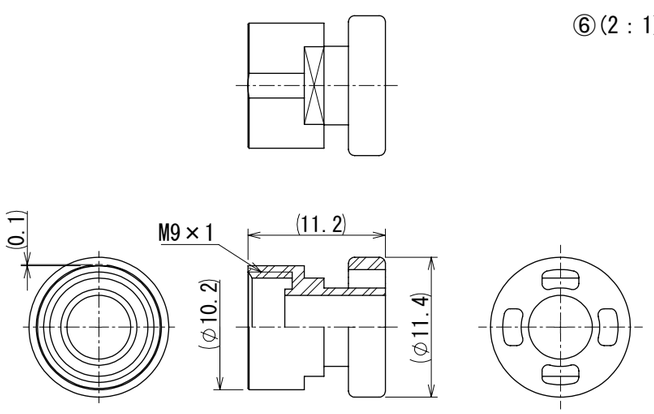

5 CAD change

NO.	MATERIAL	FINISH , REMARKS	NO.	MATERIAL	FINISH , REMARKS
4	Polybutylene terephthlate	(Black) UL94V-0			
3	Silicone rubber	(Red)	7	Silicone rubber	(Red)
2	Bronze alloy	Surface plating : gold plating 0.2μm min. Under plating : nickel plating 2μm min.	6	Polybutylene terephthlate	(Black) UL94V-0
1	Polyphenylene sulfide	(Black) UL94V-0	5	Stainless steel	

UNITS mm	SCALE	COUNT	DESCRIPTION OF REVISIONS	DESIGNED	CHECKED	DATE
	5:1	5 1	DIS-C-00019774	KS. TAKAHASHI	HY. KOBAYASHI	2025.05.15

HRS HIROSE ELECTRIC CO., LTD.

APPROVED	: MO. SATOH	2009.08.27	DRAWING NO.	EDC-116505-00-00
CHECKED	: HY. KISHI	2009.08.27	PART NO.	HR30-6PB-6S
DESIGNED	: TY. SUZUKI	2009.08.27		
DRAWN	: TY. SUZUKI	2009.08.27	CODE NO.	CL0130-0032-7-00

5 1/1

FORM HC0011-5