Dec.1.2025 Copyright 2025 HIROSE ELECTRIC CO., LTD. All Rights Reserved.
In case of consideration for using Automotive equipment / device which demand high reliability, kindly contact our sales window correspondents.

	COUNT	DESCRIPTION OF REVISIONS	BY	CHKD	DATE		COUNT	DESCRIPTION OF REVISIONS	BY	CHKD	DATE
△					. .	△					. .
△					. .	△					. .
△					. .	△					. .

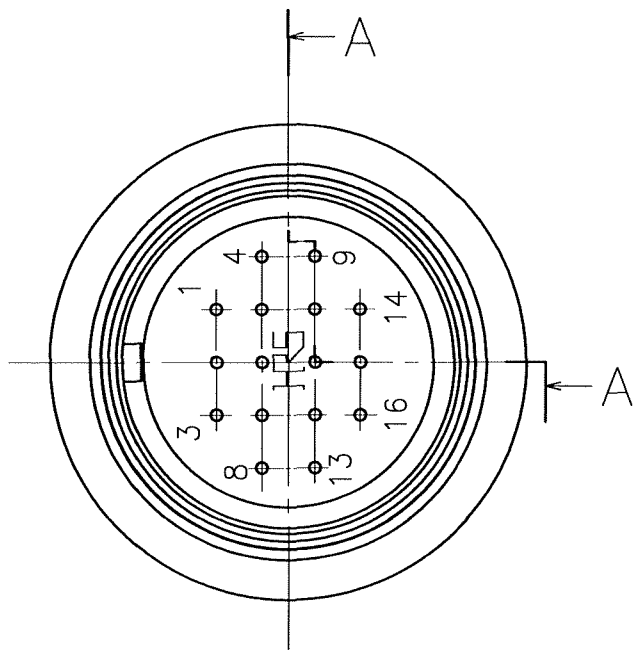

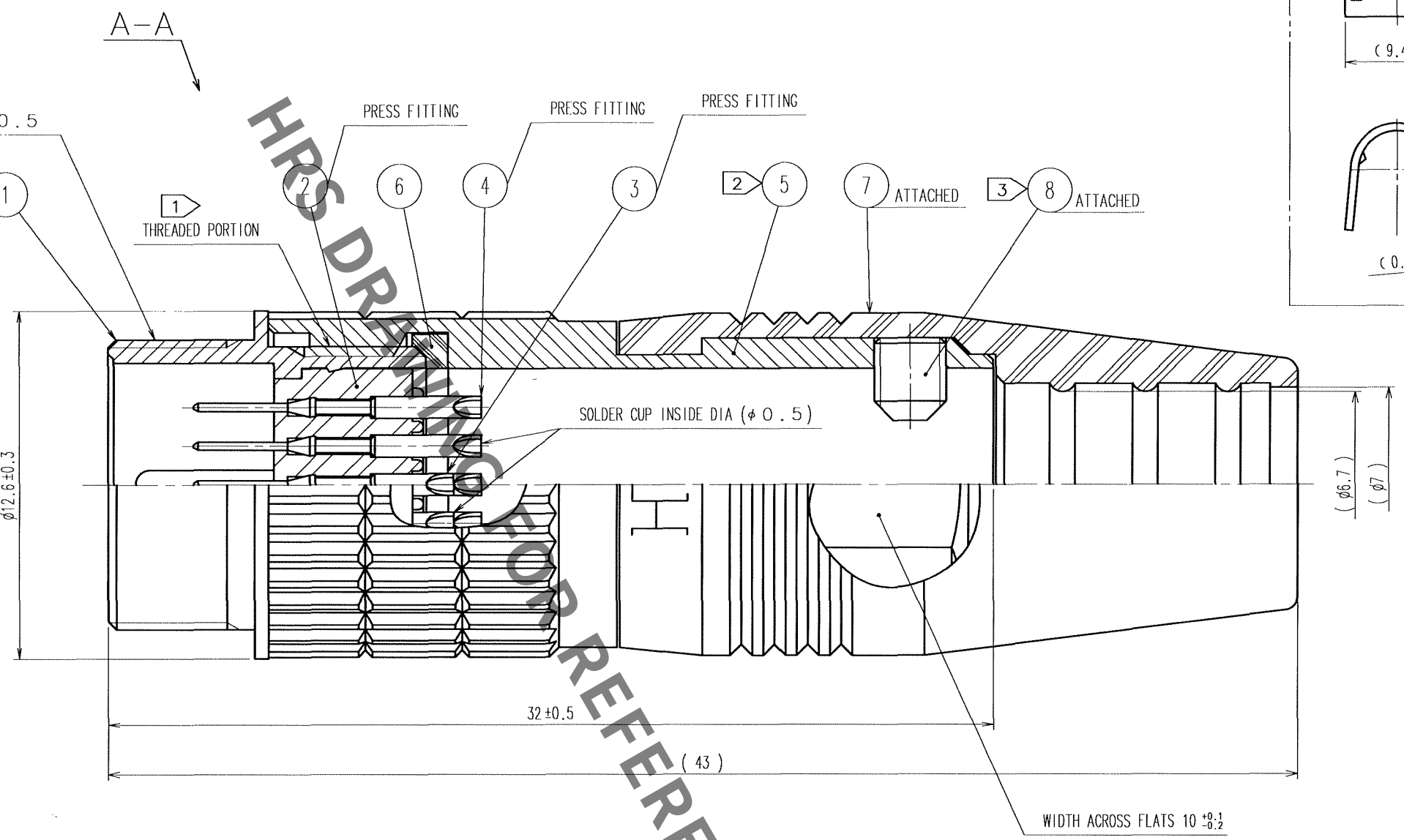

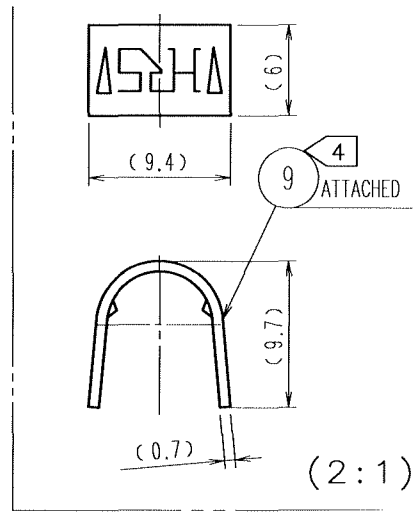

HRS DRAWING FOR REFERENCE

NOTE 1 THREAD PORTION OF REF. NO.①AND⑤IS APPLIED WITH PRECOATING TO PREVENT LOOSENESS.
HOWEVER THE ADHESIVE EFFCTIVENESS IS DECREASED WHEN REUSED.
THEREFORE,TREAD PORTION IS RECOMMENDED TO COAT WITH LOCTITE 271 MANUFACTURED BY HENKEL JAPAN OR EQUIVALENT.
2 THE RECOMMENDED TIGHTENING TORQUE OF REF. NO.⑤TO BE 1 N・m.
3 THE TIP OF REF. NO.⑧SHALL BE FIXED TO THE CONCAVE PORTION WITH REF. NO.⑨CLAMPED TO THE CABLE.
OPPOSITE SIDE DIMENSION OF A HEXAGON SOCKET OF REF. NO.⑧IS 1.27mm.
AND THE RECOMMENDED TIGHTENING TORQUE OF REF. NO.⑧ TO BE 0.3 TO 0.4 N・m.
4 MANUAL CRIMPING TOOL OF REF. NO.⑨: HR10A-TC- 02
(THE HOLE DIAMETER FOR CRIMPING : φ7)
5 ROTATION EXAMPLES OF REF. NO.①AND ⑤ ARE SHOWN.
6 OVER PLATING : GOLD 0.2μm min.
UNDER PLATING : NICKEL 2μm min.

NO.	MATERIAL	FINISH, REMARKS	NO.	MATERIAL	FINISH, REMARKS
5	BRASS	NICKEL PLATING			
4	PHOSPHOR BRONZE	6	9	BRASS	
3	PHOSPHOR BRONZE	6	8	STEEL	NICKEL PLATING JIS B 1177 HEXAGON SOCKET SCREW M2.6×0.45×3
2	PPS	(BLACK) UL94V-0	7	EPDM	(BLACK)
1	ZINC ALLOY	MATTE FINISH NICKEL PLATED	6	EPDM	(BLACK)

CODE NO.(OLD) CL	DRAWN	DESIGNED	CHECKED	APPROVED	RELEASED
	H.Kawashima '05·11·25	H.Kawashima '05·11·25	T.Akiyama '05·11·25	M.Sato 05·11·30	. .

SCALE 5 : 1	DRAWING NO. EDC3-110299-72	PART NO. HR25-9TJ-16P(72)
UNITS mm	HRS HIROSE ELECTRIC CO., LTD	CODE NO. CL125-0116-0-72 1/1

TO
R