Feb.1.2026 Copyright 2026 HIROSE ELECTRIC CO., LTD. All Rights Reserved.
In case of consideration for using Automotive equipment / device which demand high reliability, kindly contact our sales window correspondents.

	COUNT	DESCRIPTION OF REVISIONS	BY	CHKD	DATE		COUNT	DESCRIPTION OF REVISIONS	BY	CHKD	DATE
1	1	DIS-C-000585	T.K	EK	07.07.27						. .
					. .						. .
					. .						. .

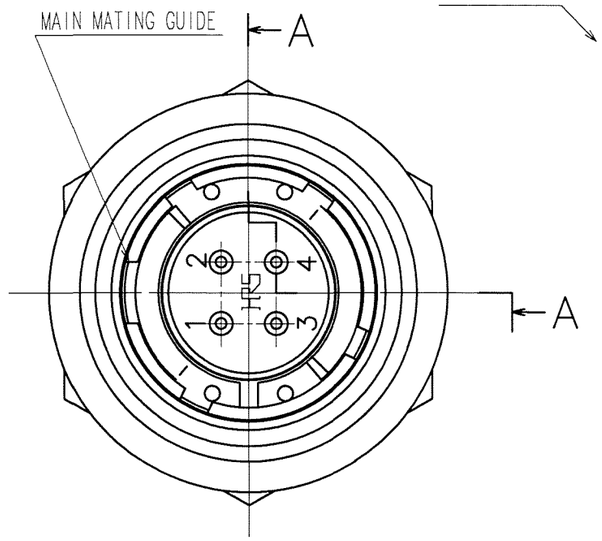

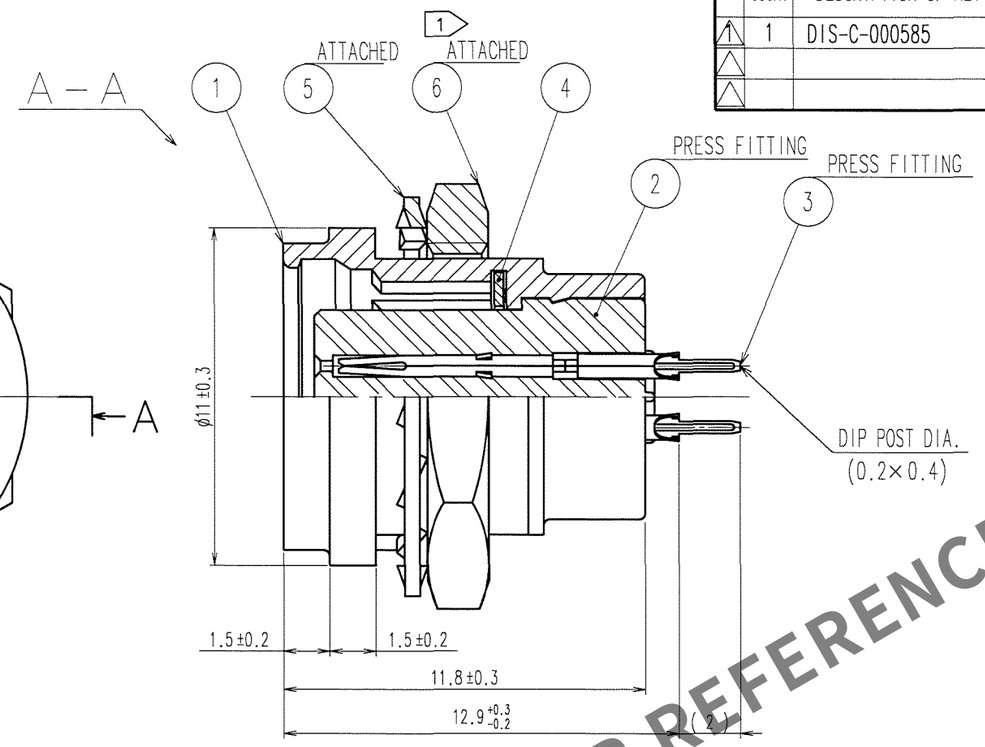

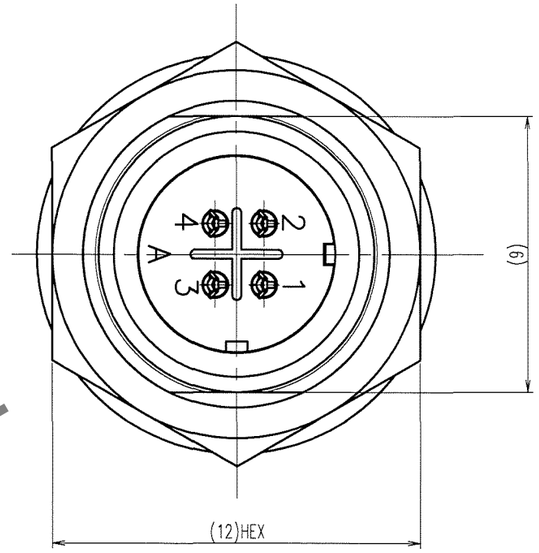

HRS DRAWING FOR REFERENCE

PANEL MOUNTED CONDITION (4 : 1)

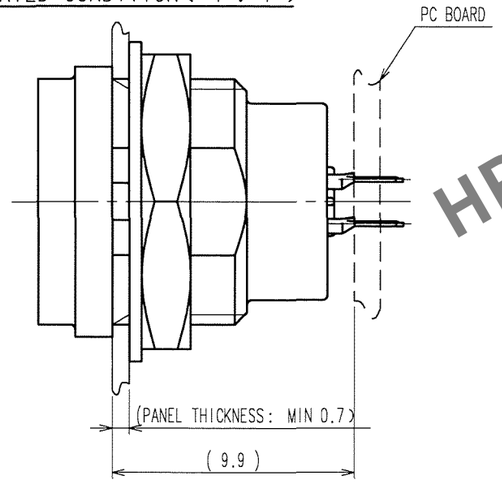

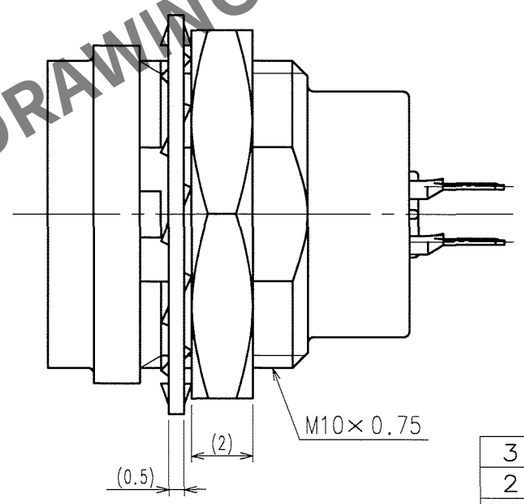

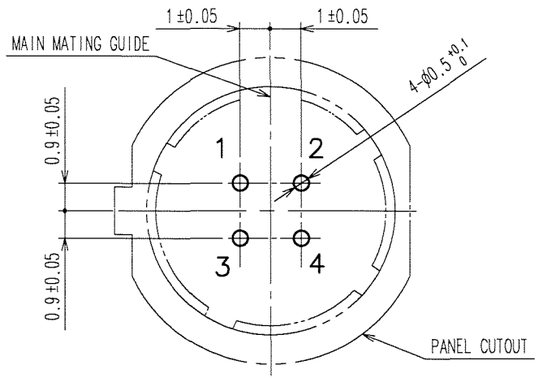

RECOMMENDED PC BOARD PATTERN
FROM MATING SIDE

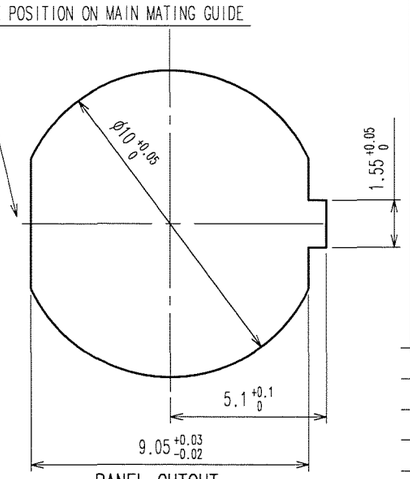

PANEL CUTOUT
FROM MATING FACE
PANEL THICKNESS: 0.7 TO 2

NOTES 1 THE RECOMMENDED TIGHTENING TORQUE OF REF. No.6 TO BE 1 N·m.
COATING WITH LOCTITE 242 MANUFACTURED BY HENKEL JAPAN OR EQUIVALENT IS RECOMMENDED TO PREVENT LOOSENESS.
2 CONTACT AREA : GOLD 0.2μm min.
TERMINAL AREA: GOLD FLASH.
UNDER PLATING: NICKEL 2μm min.

NO.	MATERIAL	FINISH, REMARKS	NO.	MATERIAL	FINISH, REMARKS
3	PHOSPHOR BRONZE	2	6	BRASS 1	NICKEL PLATING
2	POLYPHENYLENE SULFIDE	(BLACK) UL94V-0	5	PHOSPHOR BRONZE	NICKEL PLATING
1	ZINC ALLOY	MATTE FINISH NICKEL PLATING	4	BERYLLIUM COPPER	NICKEL PLATING

CODE NO.(OLD)	DRAWN	DESIGNED	CHECKED	APPROVED	RELEASED
CL	M.SATO '06 09 26	Y.YAMADA '06 09 27	. .	M.SATO '06 09 27	. .

SCALE 5 : 1	DRAWING NO. EDC3-115088	PART NO. HR25A-7R-4SA
UNITS mm	HRS HIROSE ELECTRIC CO., LTD	CODE NO. CL125-0646-3-00 1/1

FORM NO.229

TO
R