Jan.1.2026 Copyright 2026 HIROSE ELECTRIC CO., LTD. All Rights Reserved.
In case of consideration for using Automotive equipment / device which demand high reliability, kindly contact our sales window correspondents.

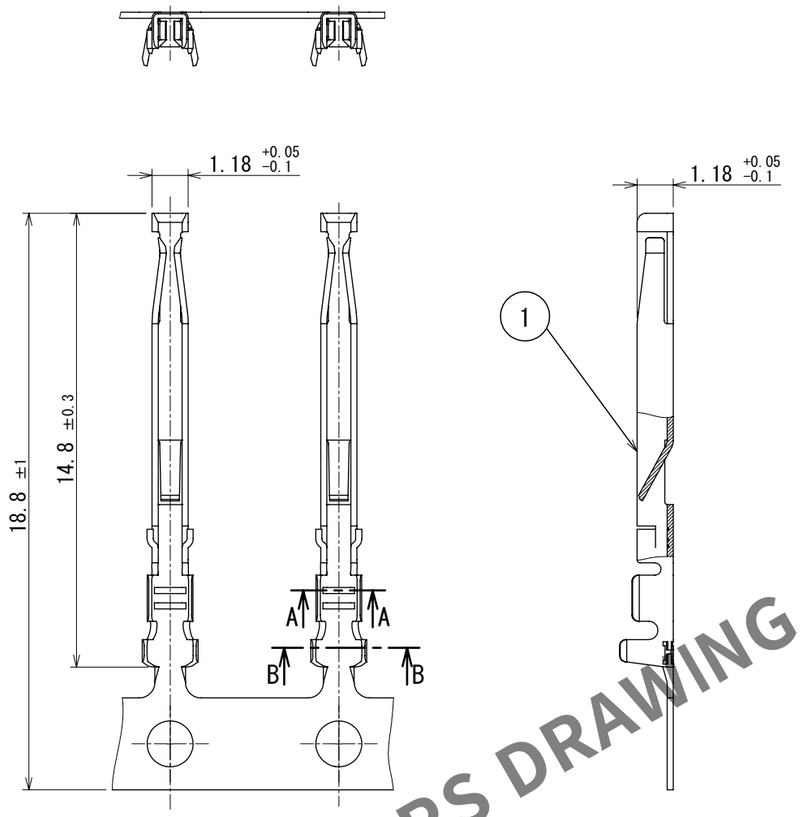

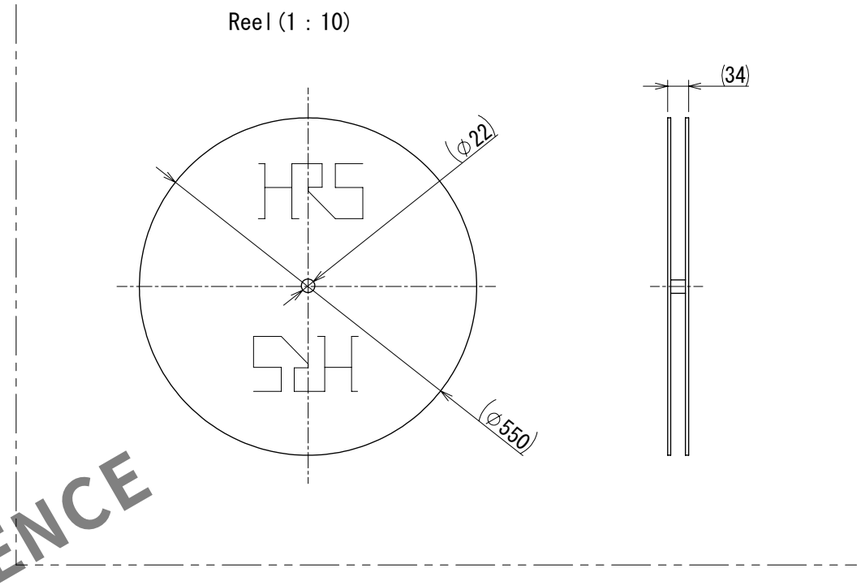

HRS DRAWING FOR REFERENCE

Notes
1 Applicable wire : AWG#24 to 28 (Insulation diameter : φ1.15 MAX)
2 Applicable crimp contact extraction tool : RP6-SC-TP (CL150-0039-0)
3 Per reel : 10,000 contacts

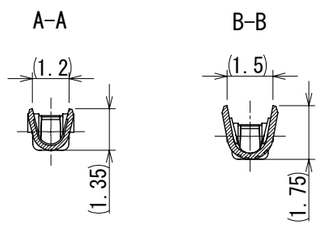

△3 CAD change

NO.	MATERIAL	FINISH , REMARKS	NO.	MATERIAL	FINISH , REMARKS
1	Phosphor bronze	Contact portion : Gold plating 0.2μm min. Underplating : Nickel plating 1μm min.			

UNITS	SCALE		COUNT	DESCRIPTION OF REVISIONS	DESIGNED	CHECKED	DATE
mm	5:1	△3	1	DIS-C-00018212	TR. YAMANOUE	HY. KOBAYASHI	2024. 08. 23

HIROSE ELECTRIC CO., LTD.

APPROVED	: TP. KOMATSU	2022. 05. 17	DRAWING NO.	EDC-396720-00-00
CHECKED	: EJ. KUNII	2022. 05. 17	PART NO.	HR22-SC1-221
DESIGNED	: SH. KOYAMA	2022. 05. 17		
DRAWN	: MK. WADA	2022. 05. 17	CODE NO.	CL0122-0095-0-00 △3 1/1

FORM HC0011-5