Sep.1.2025 Copyright 2025 HIROSE ELECTRIC CO., LTD. All Rights Reserved.
In case of consideration for using Automotive equipment / device which demand high reliability, kindly contact our sales window correspondents.

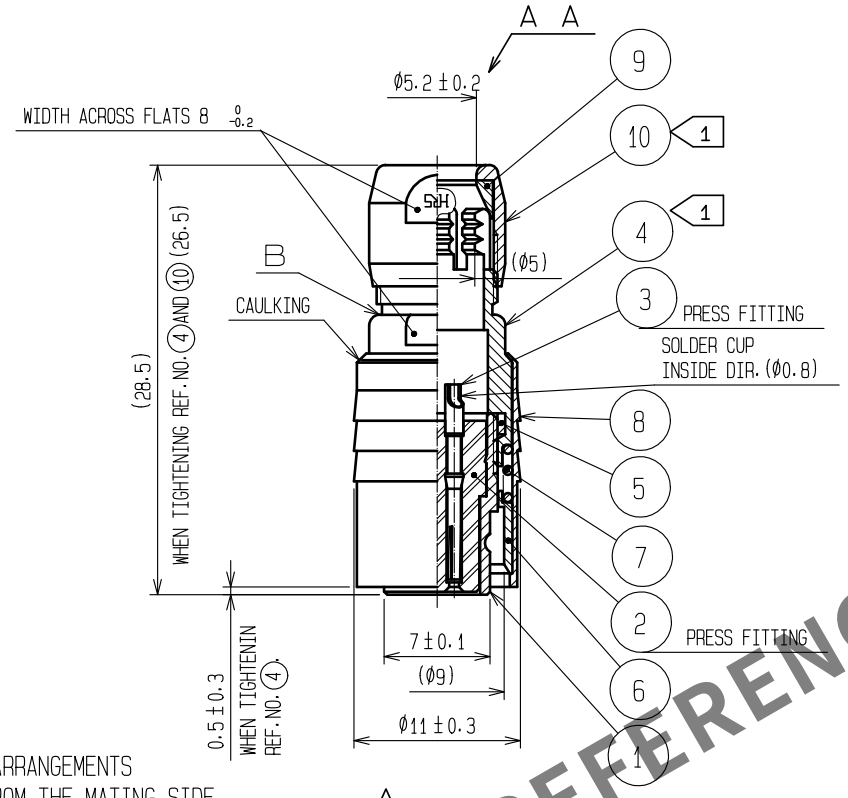

CONTACT ARRANGEMENTS
VIEWED FROM THE MATING SIDE

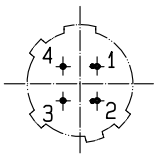

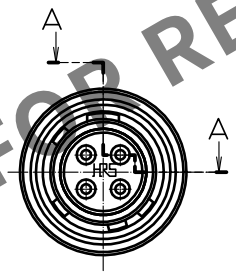

HRS DRAWING FOR REFERENCE

NOTES 1 THE RECOMMENDED CLAMP TORQUE, REF. NO. 4 AND 10 : 1.5 N·m.
1 THREAD LOCKER TO THE THREADED PORTION OF REF. NO. 1 APPLIES TO PREVENT REF. NO. 4 FROM LOOSING.
RECOMMENDED THREAD LOCKER: LOCTITE 263, HENKEL JAPAN LTD.
REF. NO. 10 SHALL BE TIGHTENED BY TORQUE AFTER CLAMPED UNTIL IT TOUCHES THE SURFACE B.
2 ONE EXAMPLE OF THE ROTATION OF REF. NO. 1, 4 AND 10 ARE SHOWN.
1 3 THE ASSEMBLY THIS PRODUCT APPLIES TO THE MANUAL ETAD-C0355-00.

NO.	MATERIAL	FINISH . REMARKS	NO.	MATERIAL	FINISH . REMARKS
5	POLYAMIDE				
4	BRASS	MATTE FINISH NICKEL PLATED	10	BRASS	MATTE FINISH NICKEL PLATED
3	BERYLLIUM COPPER	GOLD PLATING 0.2μm min. NICKEL UNDER PLATING 2μm min.	9	POLYAMIDE	
			8	BRASS	MATTE FINISH NICKEL PLATED
2	POLYAMIDE	(BLUE)	7	STEEL	NICKEL PLATING
1	ZINC ALLOY	MATTE FINISH NICKEL PLATED	6	STAINLESS STEEL	

UNITS	SCALE		COUNT	DESCRIPTION OF REVISIONS	DESIGNED	CHECKED	DATE
mm	2 : 1	1	2	DIS-C-00016940	HT. ZENBA	EJ. KUNII	20240214

HIROSE ELECTRIC CO., LTD.

APPROVED	: MO. SATOH	20060407	DRAWING NO.	EDC4-007757-73
CHECKED	: EJ. KUNII	20060407	PART NO.	HR10-7P-4S(73)
DESIGNED	: DS. MATSUNE	20060403	CODE NO.	CL0110-0022-9-73
DRAWN	: DS. MATSUNE	20060403		1 / 1

FORM HC0011-5-51