Feb.1.2026 Copyright 2026 HIROSE ELECTRIC CO., LTD. All Rights Reserved.
In case of consideration for using Automotive equipment / device which demand high reliability, kindly contact our sales window correspondents.

△1 (Add Units Inch / Delete Top view)

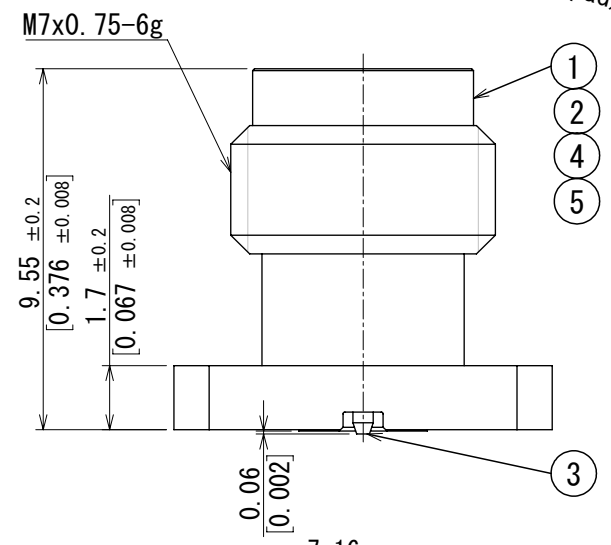

4 Recommended land pattern drawing

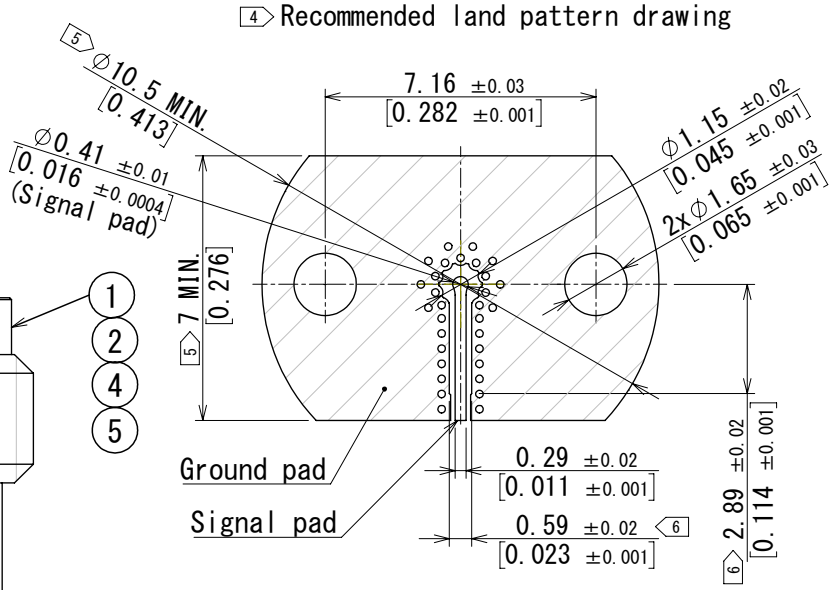

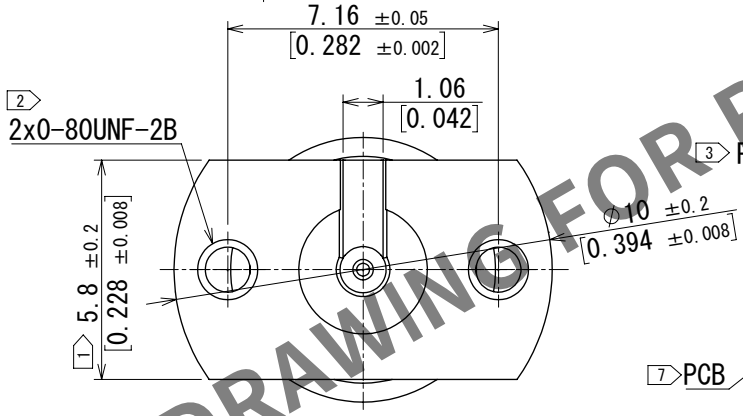

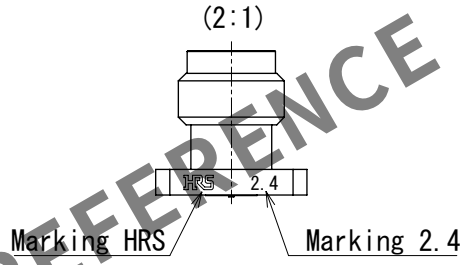

3 PCB mounting drawing(2:1)

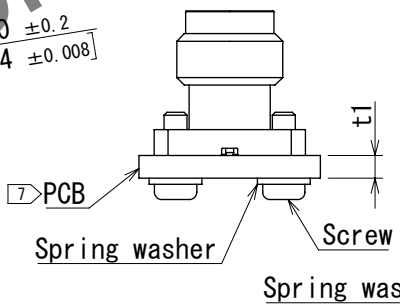

3 0-80UNF
Outline drawing
(2:1)

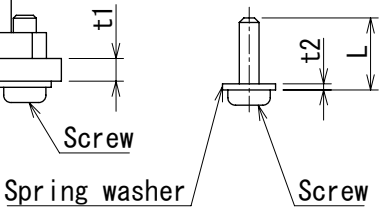

HRS DRAWING FOR REFERENCE

1 Please hold the connector flange with a spanner to avoid any torque acting on the PCB when the connector is mating.
2 0-80UNF screws recommended tightening torque is 0.09N·m. Please tighten the screws evenly during the connector mounting to ensure stable electrical contact.
3 Recommended length of the screws: L = t1(PCB) + t2(spring washer) + 2 mm [0.08 in].
4 PCB design is changed depending on the PCB material, thickness and stackup.
5 The solder mask prohibited area is indicated.
6 The connector is placed over this area.
7 PCB thickness t1 should be 0.8 mm [0.032 in] or more.
8. This connector is not recommended for use in actual commercial equipment.

NO.	MATERIAL	FINISH , REMARKS	NO.	MATERIAL	FINISH , REMARKS
3	BERYLLIUM COPPER	GOLD PLATING			
2	STAINLESS STEEL	PASSIVATED	5	PTFE	
1	BRASS	NICKEL PLATING	4	PEI	

UNITS △1 mm [inch]	SCALE 5:1	COUNT	DESCRIPTION OF REVISIONS	DESIGNED	CHECKED	DATE
		△1 2	DIS-D-00016021	TS.KANEKO	TS.NAKAGAWA	2023.06.01

HIROSE ELECTRIC CO., LTD.

APPROVED	: TS.NAKAGAWA	2023.04.07
CHECKED	: TS.KANEKO	2023.04.07
DESIGNED	: YK.KIUCHI	2023.04.07
DRAWN	: YK.KIUCHI	2023.04.07

DRAWING NO.	EDC-401977-00-00
PART NO.	H2.4-R-SR2-SA
CODE NO.	CL0338-0029-0-00 △1 1/1

FORM HC0011-5