Feb.1.2026 Copyright 2026 HIROSE ELECTRIC CO., LTD. All Rights Reserved.
In case of consideration for using Automotive equipment / device which demand high reliability, kindly contact our sales window correspondents.

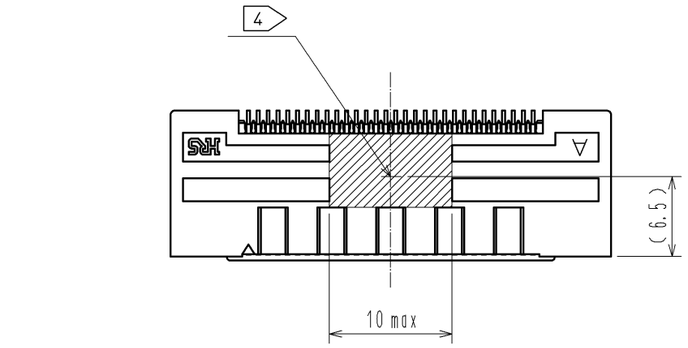

A-A(5:1)

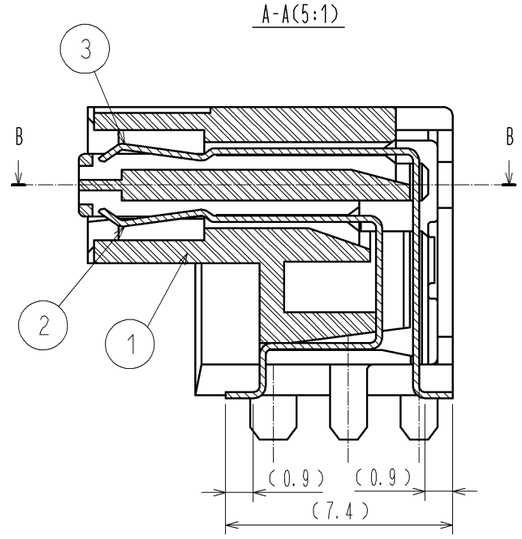

B-B(5:1)

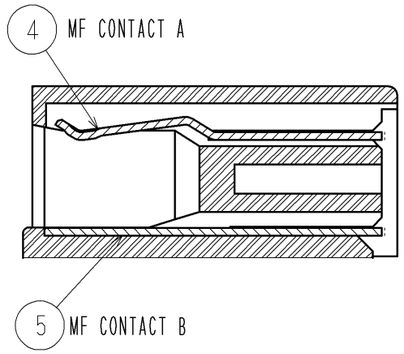

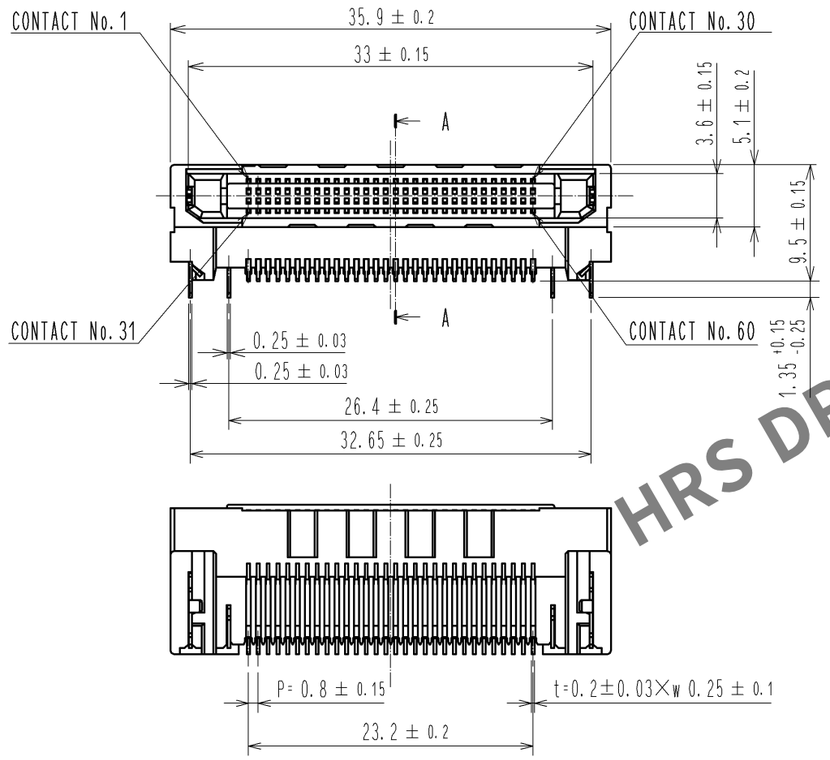

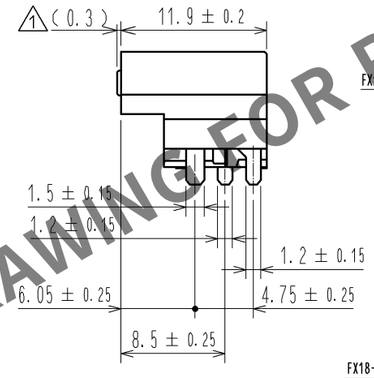

1 CROSS SECTION OF MATING(FREE)
COPLANAR CONNECTION

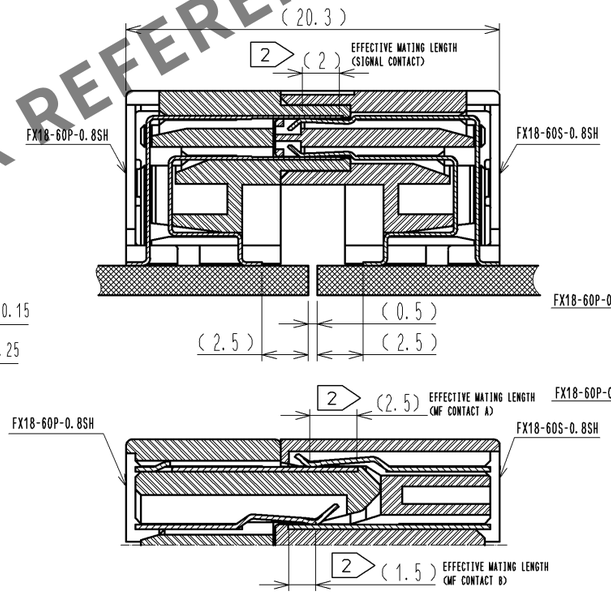

1 CROSS SECTION OF MATING(FREE)
VERTICAL CONNECTION

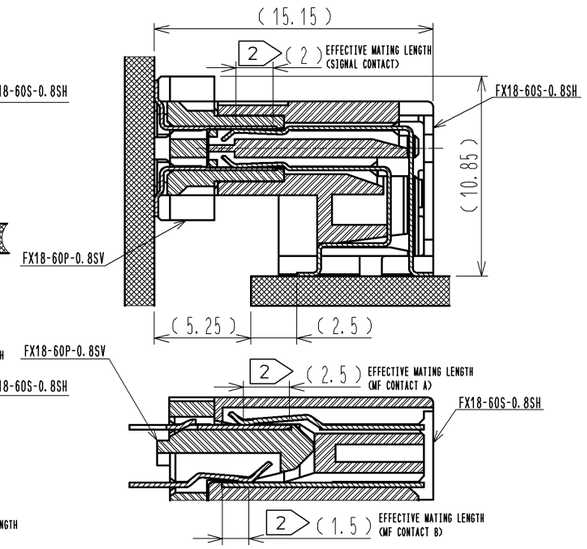

HRS DRAWING FOR REFERENCE

NOTE 1 LEAD CO—PLANARITY IS 0.1mm MAX.
2 CONTACTS ARE 3 STEPS SEQUENTIAL. (MF CONTACT A=>SIGNAL CONTACT=>MF CONTACT B)
WHEN USING THIS SEQUENTIAL STRUCTURE, PLEASE AVOID ANGLED INSERTION.
3 MF CONTACT A AND MF CONTACT B CAN BE USED AS POWER SUPPLY CONTACT. (3A/PIN MAX)
4 IT SHOWS CONNECTOR'S CENTRE OF GRAVITY AND VACUUM PICKUP AREA.
5 PACKING FOR PRODUCT APPLIES EMBOSSED CARRIER TAPE PACKING.(300pcs/RL)
6 BLEMISH AND HIT MARK CAN BE OCCURED THROUGH OUT THE MANUFACTURING PROCESS WHICH DOESN'T AFFECT QUALITY LEVEL.
7 THE DIMENSIONS IN PARENTHESES ARE FOR REFERENCES.
1 8 SOLDERING LEAD OF MF CONTACT A SPLITS INTO TWO POLES.
BE SURE TO CONNECT TO THE SAME CIRCUIT.

NO.	MATERIAL	FINISH , REMARKS
3	PHOSPHOR BRONZE	CONTACT AREA:GOLD 0.1μm LEAD AREA:GOLD 0.03μm UNDER PLATING:NICKEL 1.3μm
2	PHOSPHOR BRONZE	CONTACT AREA:GOLD 0.1μm LEAD AREA:GOLD 0.03μm UNDER PLATING:NICKEL 1.3μm
1	POLYAMIDE	BLACK UL94V-0

NO.	MATERIAL	FINISH , REMARKS
7	POLYESTER	(EMBOSSED COVER TAPE)
6	POLYSTYRENE	(EMBOSSED CARRIER TAPE)
5	PHOSPHOR BRONZE	CONTACT AREA:GOLD 0.1μm LEAD AREA:TIN-PLATING 1μm UNDER PLATING:NICKEL 1.3μm
4	PHOSPHOR BRONZE	CONTACT AREA:GOLD 0.1μm LEAD AREA:TIN-PLATING 1μm UNDER PLATING:NICKEL 1.3μm

UNITS	SCALE	COUNT	DESCRIPTION OF REVISIONS	DESIGNED	CHECKED	DATE
mm	2 : 1	1 8	DIS-F-005578	TH. SANO	KI. HIROKAWA	11.07.21

HRS HIROSE ELECTRIC CO., LTD.

APPROVED	HS. OKAWA	10.05.10
CHECKED	KI. HIROKAWA	10.05.10
DESIGNED	TH. SANO	10.05.10
DRAWN	KI. HIROKAWA	10.03.04

DRAWING NO. EDC3-159082-02
PART NO. FX18-60S-0.8SH(11)
CODE NO. CL579-0010-3-11
1 1/2

Feb.1.2026 Copyright 2026 HIROSE ELECTRIC CO., LTD. All Rights Reserved.
In case of consideration for using Automotive equipment / device which demand high reliability, kindly contact our sales window correspondents.

5 DRAWING FOR PACKING (2:1)

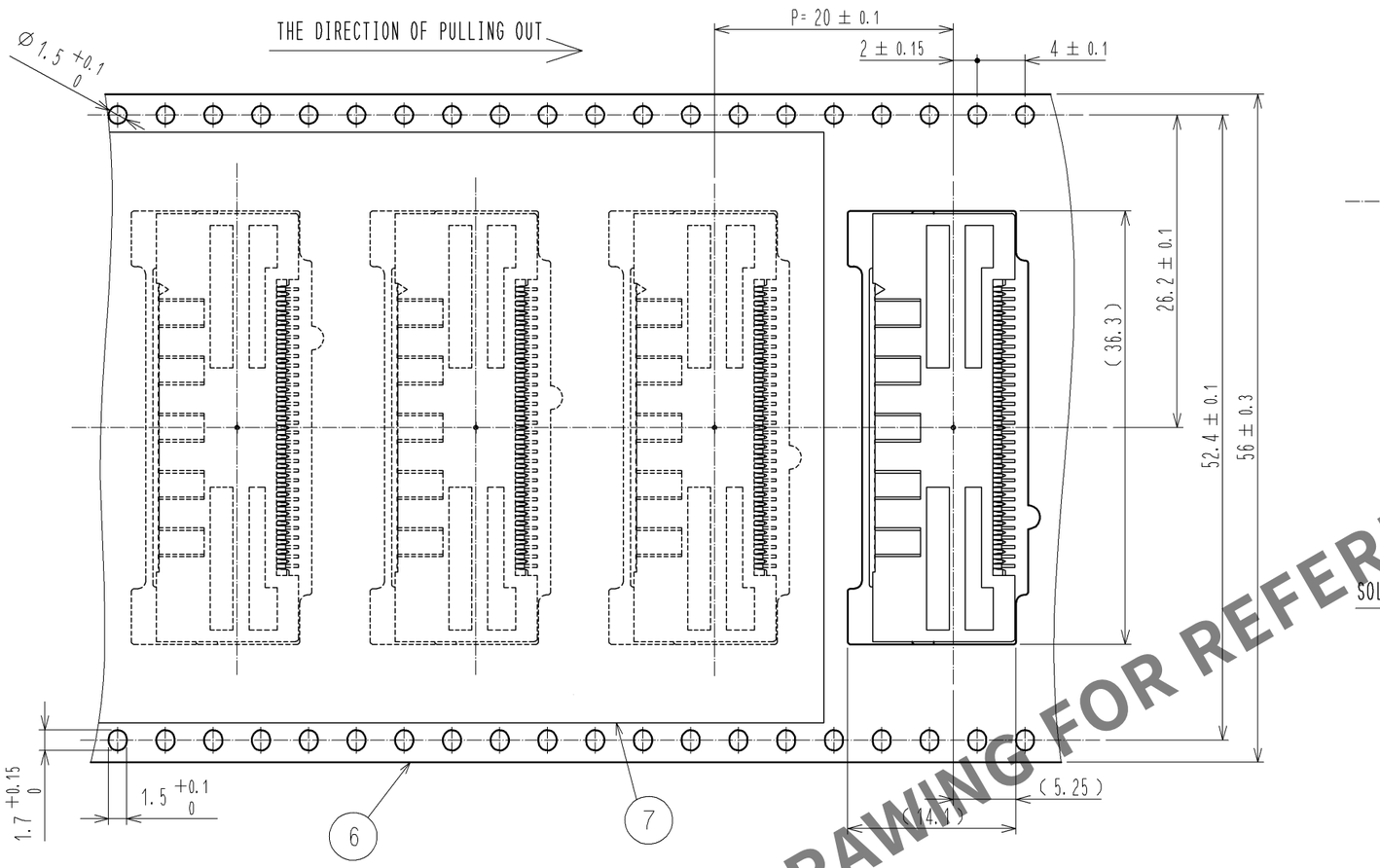

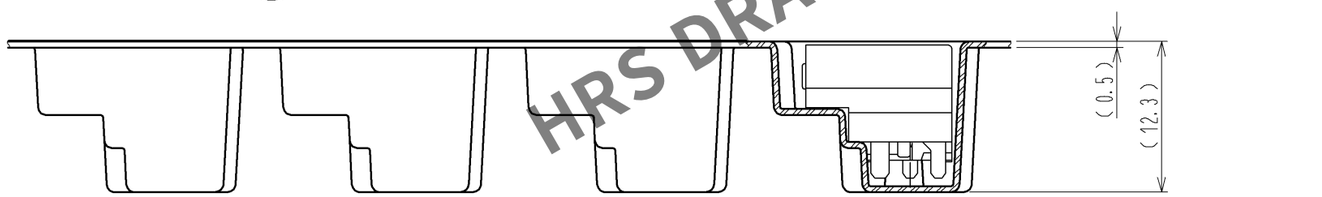

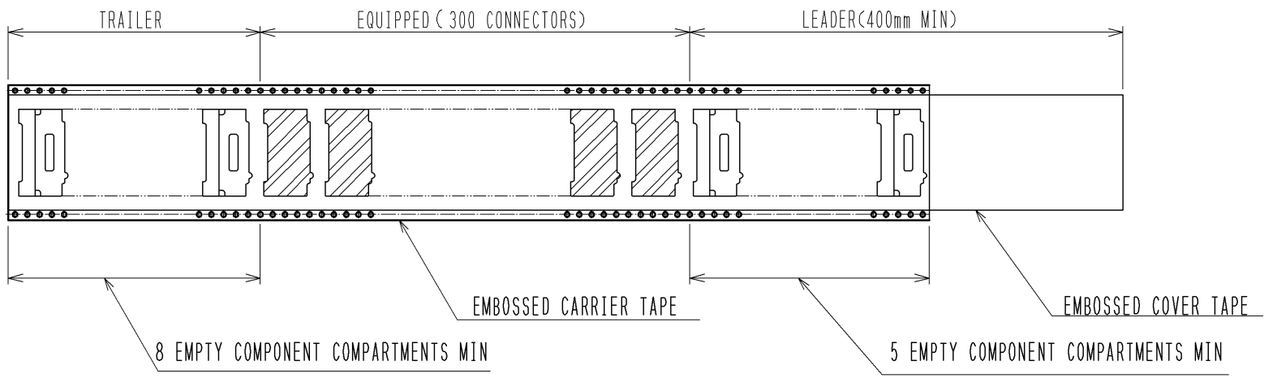

REELING DIMENSION(FREE)

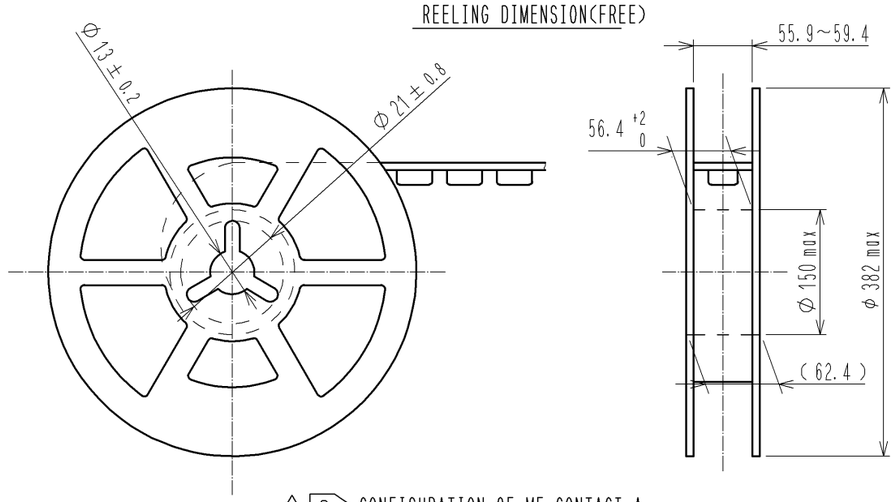

1 8 CONFIGURATION OF MF CONTACT A

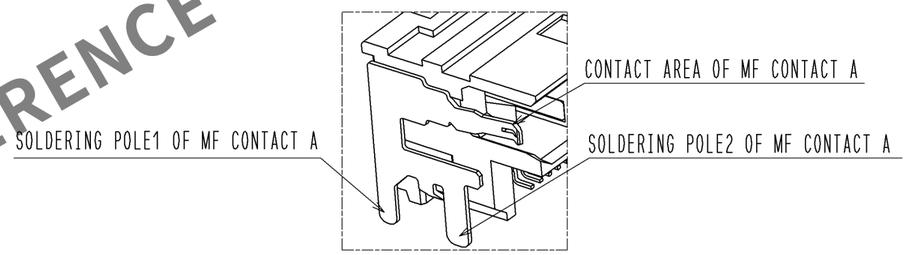

RECOMMENDED LAND PATTERN DIMENSION OF PCB(2:1)
(PCB THICKNESS: t=1.6mm METAL MASK THICKNESS : t=0.12mm)

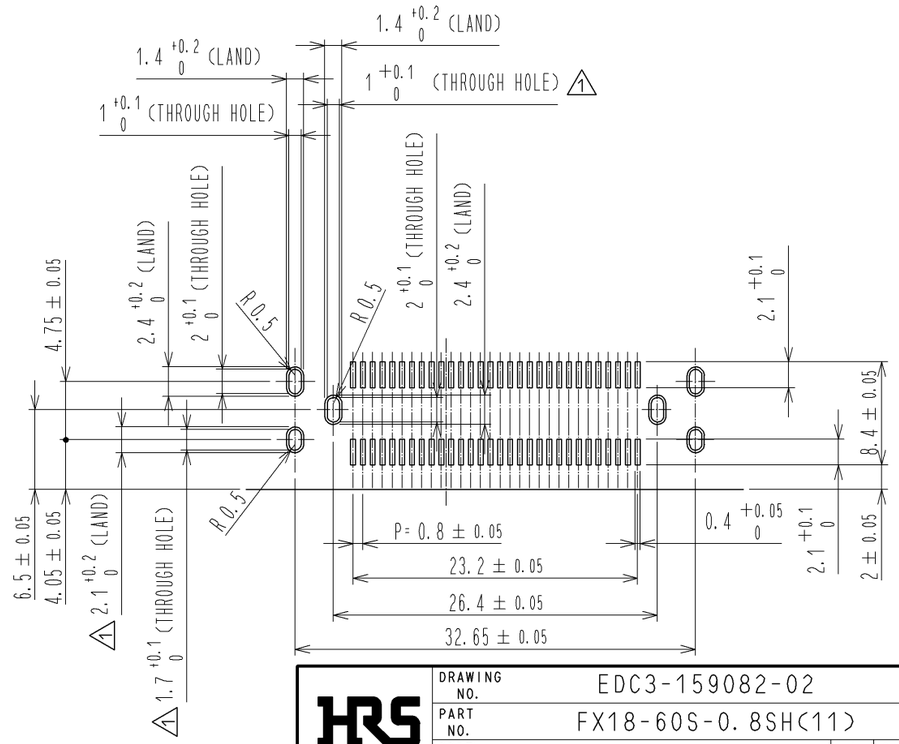

HRS DRAWING FOR REFERENCE

HRS	
DRAWING NO.	EDC3-159082-02
PART NO.	FX18-60S-0.8SH(11)
CODE NO.	CL579-0010-3-11
	2/2