Jan.1.2026 Copyright 2026 HIROSE ELECTRIC CO., LTD. All Rights Reserved.
In case of consideration for using Automotive equipment / device which demand high reliability, kindly contact our sales window correspondents.

	COUNT	DESCRIPTION OF REVISIONS	BY	CHKD	DATE		COUNT	DESCRIPTION OF REVISIONS	BY	CHKD	DATE
△					. .	△					. .
△					. .	△					. .
△					. .	△					. .

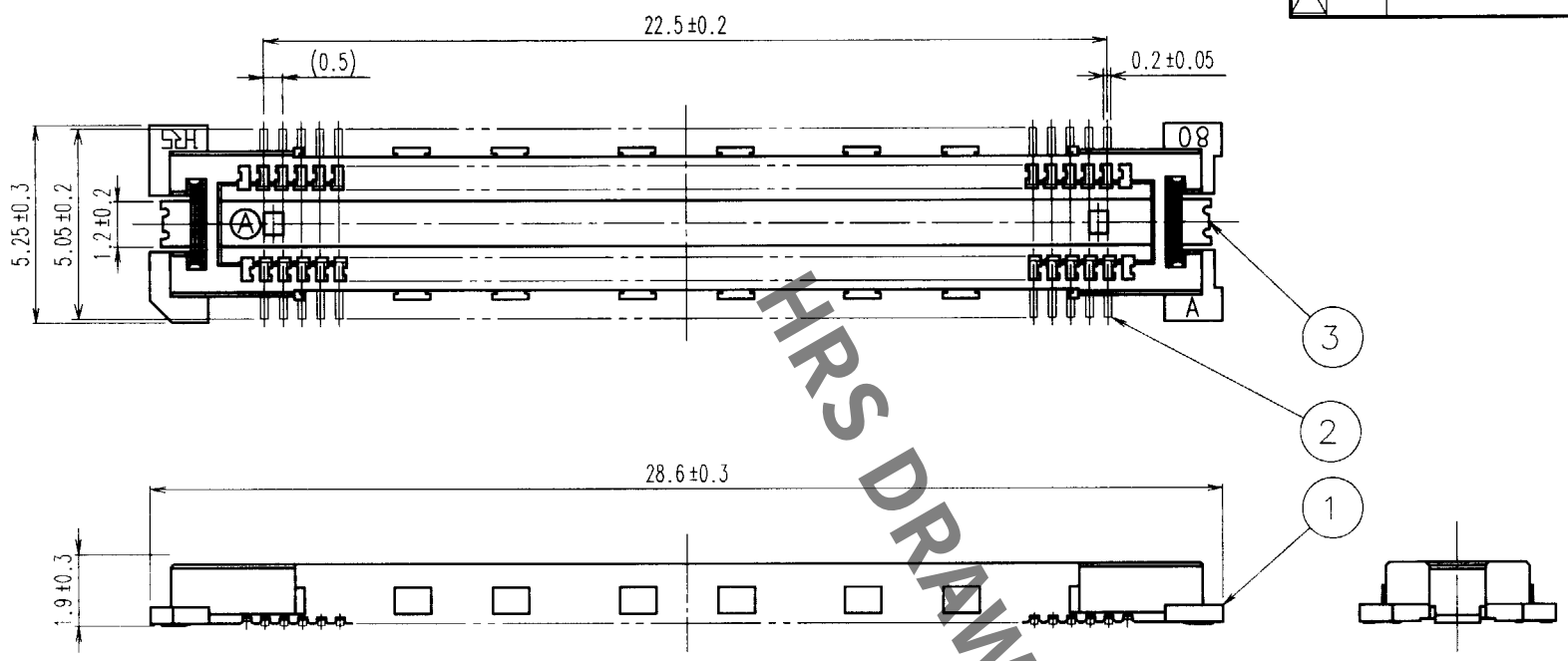

HRS DRAWING FOR REFERENCE

RECOMMENDED LAND PATTERN DIMENSION OF PCB

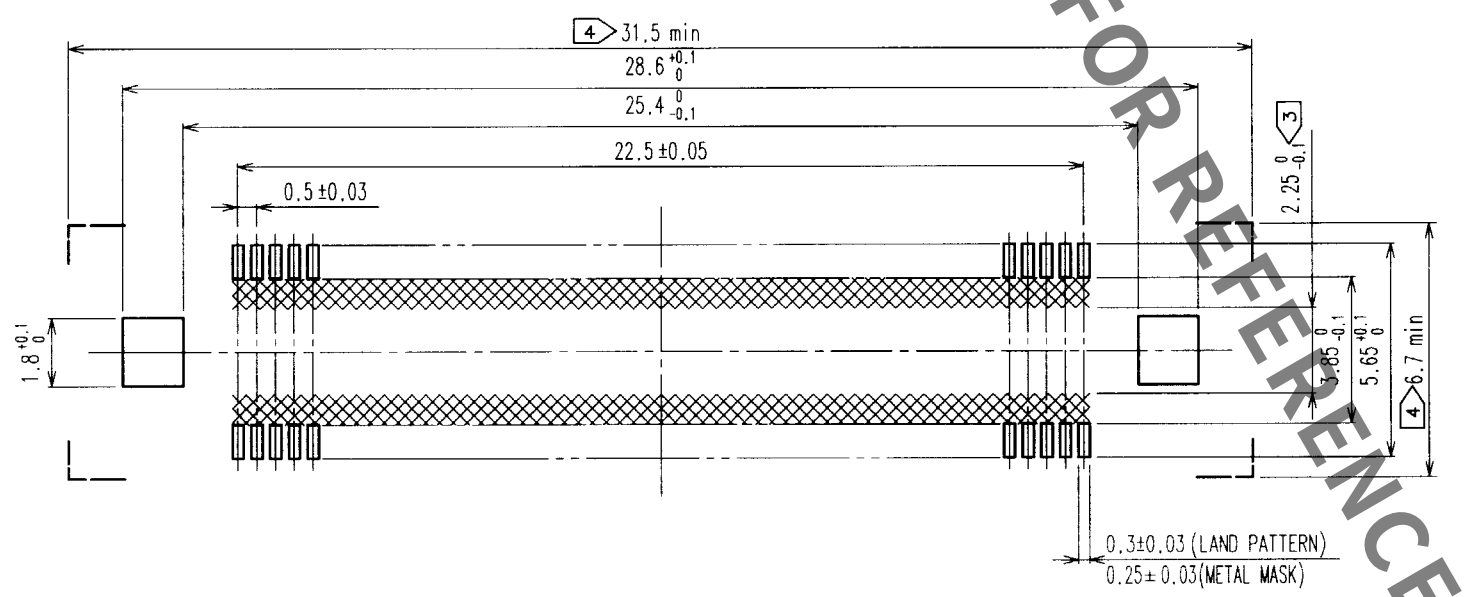

SIGNAL PORTION CROSS SECTION (10 : 1)

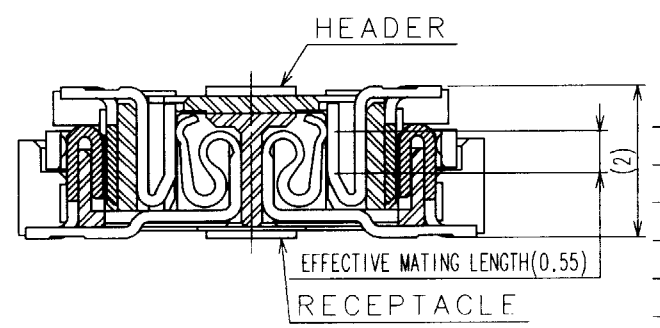

NO.	MATERIAL	FINISH, REMARKS	NO.	MATERIAL	FINISH, REMARKS
2	COPPER ALLOY	CONTACT AREA:GOLD (0.1μm) OVER NICKEL LEAD:GOLD FLASH OVER NICKEL			
1	LCP	BEIGE UL94V-0	3	PHOSPHOR BRONZE	TIN PLATED

NOTES
1 SMT LEAD-COPLANARITY:0.1 MAX.
2 THIS PRODUCT HAS NO POLARITY TO PATTERN FOR MOUNTING.
3 MAKE SURE WIDTH OF PATTERN IS WITHIN THAT OF LAND ,OR LEAD MAY TOUCH PATTERN. (THIS APPLIES TO HATCHED ▨ AREA.)
4 DO NOT MOUNT OTHER DEVICES ONTO [ ] AREA ,OR MATING PAIR CANNOT BE MATED.
5 TO BE EMBOSSED CARRIER TAPED AS SPECIFIED IN SHEET 2.

CODE NO. (OLD)	DRAWN	DESIGNED	CHECKED	APPROVED	RELEASED
CL					
	99.10.27	99.10.27	99.10.28	99.10.28	

SCALE 5 : 1	DRAWING NO. EDC3-152105-02	PART NO. FX11LB-92P-SV (22)
UNITS mm	HRS HIROSE ELECTRIC CO.,LTD.	CODE NO. CL573-0053-8-22 1/2

TO
PCK

FORM NO.229

Jan.1.2026 Copyright 2026 HIROSE ELECTRIC CO., LTD. All Rights Reserved.
In case of consideration for using Automotive equipment / device which demand high reliability, kindly contact our sales window correspondents.

	COUNT	DESCRIPTION OF REVISIONS	BY	CHKD	DATE		COUNT	DESCRIPTION OF REVISIONS	BY	CHKD	DATE
△					. .	△					. .
△					. .	△					. .
△					. .	△					. .

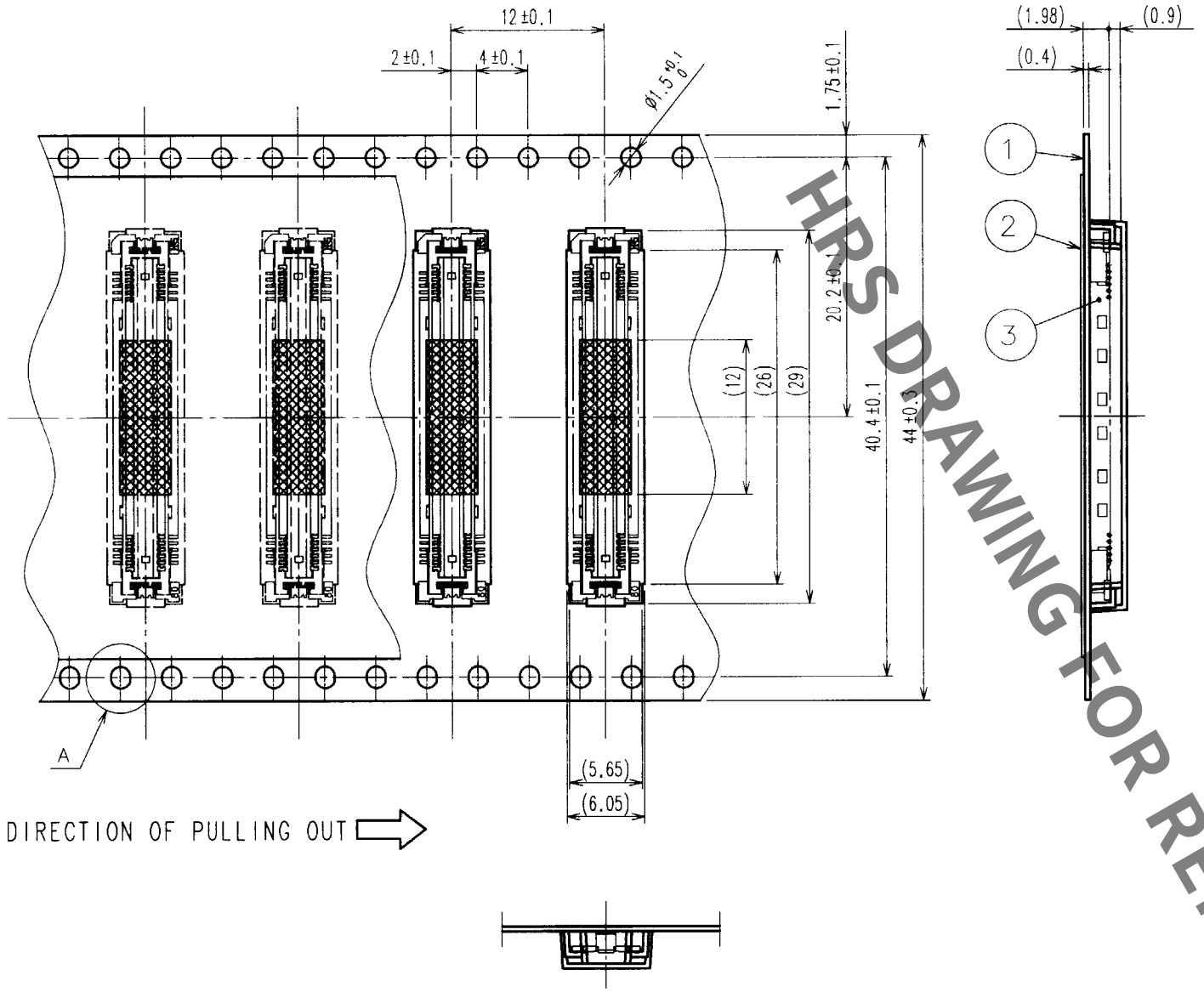

REELED DIMENSION (Free)

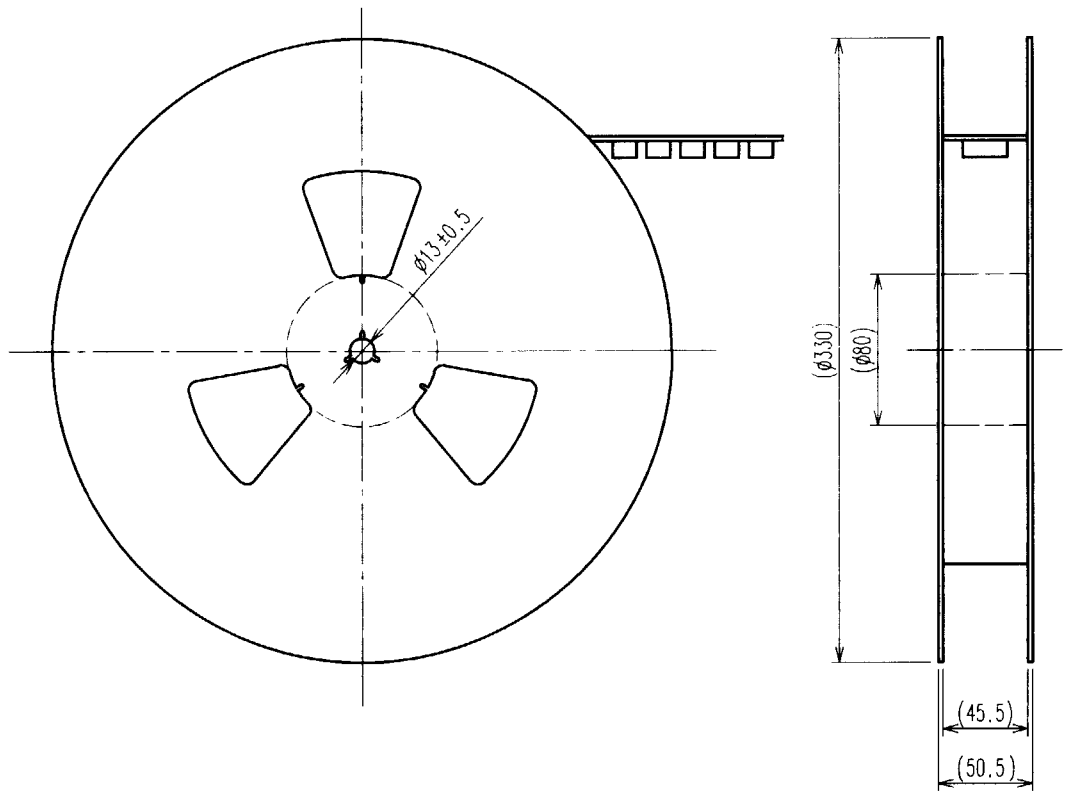

NOTES 1 1REEL:1000 CONNECTORS.
2 MINIMUM 10 COMPARTMENTS FROM BOTH REEL ENDS REMAIN EMPTY.
3 THIS PRODUCT HAS NO POLAVITY TO TAPE AND REEL PACKAGING.

A (5 : 1)

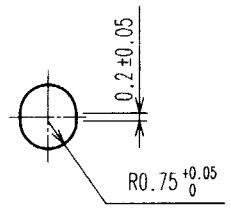

DETAIL FOR VACUUM PICKUP (5:1)

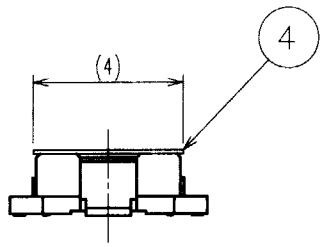

NO.	MATERIAL	FINISH, REMARKS	NO.	MATERIAL	FINISH, REMARKS
2	PET	TOP COVER TAPE	4	POLYIMIDE	(TAPE FOR VACUUM PICKUP)
1	PS	EMBOSSED CARRIER TAPE	3	(CONNECTOR)	

CODE NO.(OLD)	DRAWN	DESIGNED	CHECKED	APPROVED	RELEASED
CL					
DRAWING FOR PACKING	99.10.27	99.10.27	99.10.28	99.10.28	. .

SCALE 2 : 1	DRAWING NO. EDC3-152105-02	PART NO. FX11LB-92P-SV(22)
UNITS mm	HRS HIROSE ELECTRIC CO., LTD	CODE NO. CL573-0053-8-22

2

TO
PCK

HRS DRAWING FOR REFERENCE