Jan.1.2026 Copyright 2026 HIROSE ELECTRIC CO., LTD. All Rights Reserved.
In case of consideration for using Automotive equipment / device which demand high reliability, kindly contact our sales window correspondents.

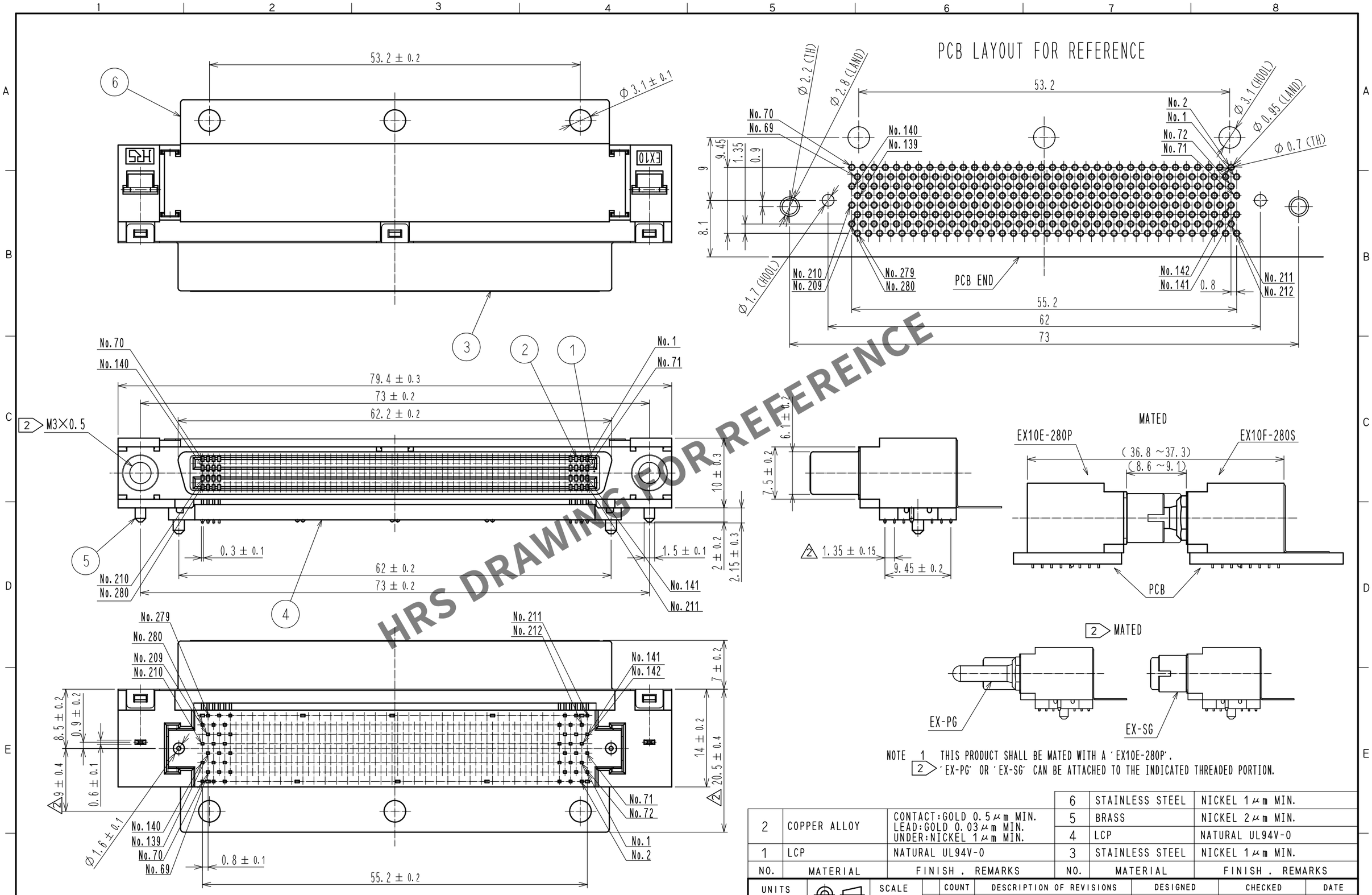

NOTE 1 THIS PRODUCT SHALL BE MATED WITH A 'EX10E-280P'.
2 'EX-PG' OR 'EX-SG' CAN BE ATTACHED TO THE INDICATED THREADED PORTION.

NO.	MATERIAL	FINISH , REMARKS	NO.	MATERIAL	FINISH , REMARKS
2	COPPER ALLOY	CONTACT:GOLD 0.5μm MIN. LEAD:GOLD 0.03μm MIN. UNDER:NICKEL 1μm MIN.	6	STAINLESS STEEL	NICKEL 1μm MIN.
			5	BRASS	NICKEL 2μm MIN.
			4	LCP	NATURAL UL94V-0
1	LCP	NATURAL UL94V-0	3	STAINLESS STEEL	NICKEL 1μm MIN.

UNITS	SCALE		COUNT	DESCRIPTION OF REVISIONS	DESIGNED	CHECKED	DATE
mm	2 : 1	2	3	DIS-E-00001163	MO. SHIMOYAMA	NM. NISHIMATSU	17.09.12

HRS HIROSE ELECTRIC CO., LTD.

APPROVED	: AO. SUZUKI	11.05.19	DRAWING NO.	EDC-127113-00-00
CHECKED	: KN. ICHIKAWA	11.05.19	PART NO.	EX10F-280S
DESIGNED	: MO. SHIMOYAMA	11.05.19	CODE NO.	CL232-0625-0-00
DRAWN	: MO. SHIMOYAMA	11.05.19		2 1/1

FORM HC0011-5-7