Dec.1.2025 Copyright 2025 HIROSE ELECTRIC CO., LTD. All Rights Reserved.
In case of consideration for using Automotive equipment / device which demand high reliability, kindly contact our sales window correspondents.

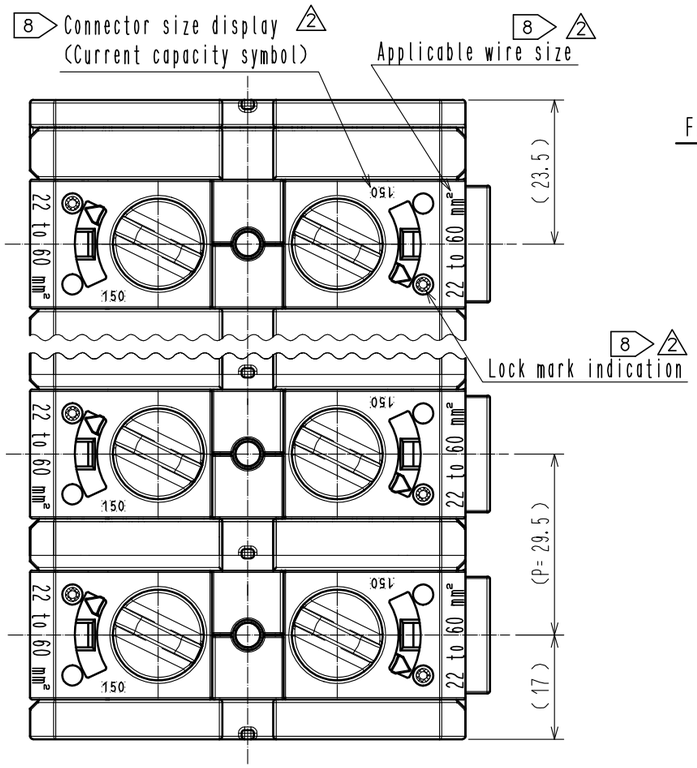

Figure.1 Locked State External View

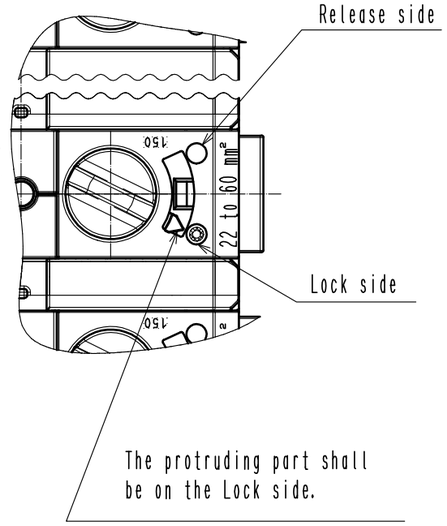

Figure.2 Applicable Contact (Commercial item)(Free)

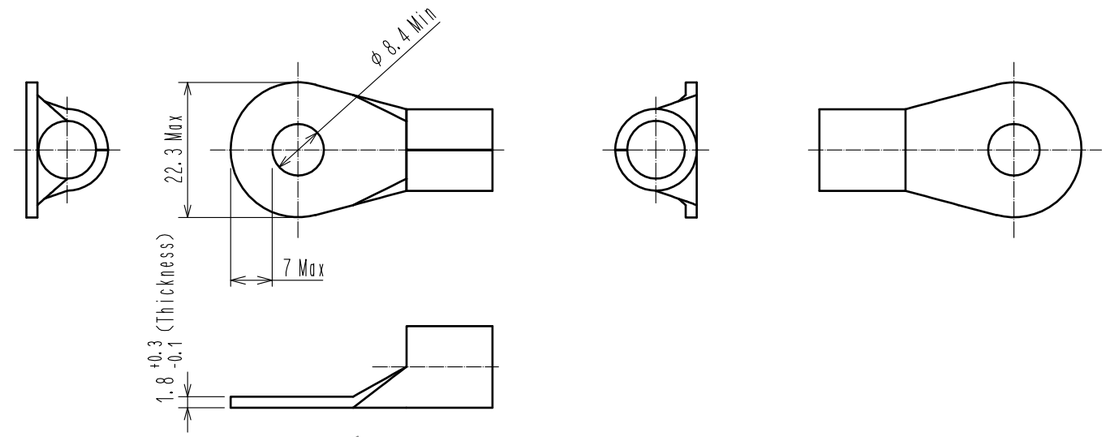

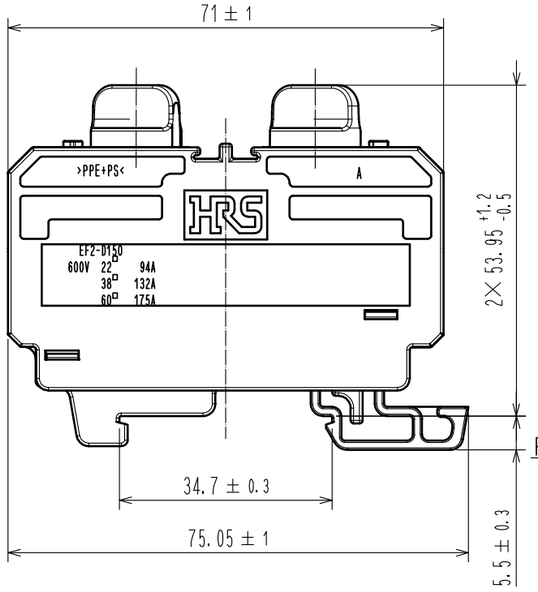

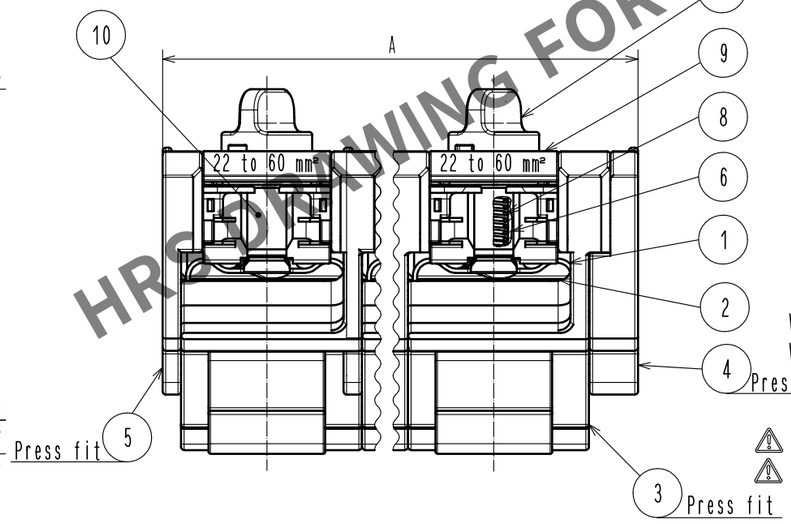

HRS DRAWING FOR REFERENCE

Notes 1. This product should be handled in accordance with the EF2 series guideline ATAD-C0387-00.
1 2. Applicable crimp contacts:
TE Connectivity Ltd. 33471.
TE Connectivity Ltd. 321600.
TE Connectivity Ltd. 321868.
NICHIFU CO., LTD R22-8, R22-10, R22-12 J. S. T. MFG. CO., LTD R22-8, R22-10, R22-12 or equivalent.
NICHIFU CO., LTD R38-8, R38-10, R38-12 J. S. T. MFG. CO., LTD R38-8, R38-10, R38-12 or equivalent.
NICHIFU CO., LTD R60-8, R60-10, R60-12 J. S. T. MFG. CO., LTD R60-8, R60-10, R60-12 or equivalent.
3. Applicable crimping tool: JIS-C-9711 MAXELL IZUMI CO., LTD 9H-60 or REC-Li150.
4. When inserting the contact, please do so until Ref. No. ⑦ rotates back to its original position (shown in Figure.1 Locked State External View).
Furthermore, lightly pull the cable to confirm that the contact is locked and mated.
5. Points to note before use:
- Use only tin coated material.
- Please check that dimesnsions satisfy those of Figure.2 and that there is no deformation, dirt etc., or abnormal contact resistance value.
- Insertion and withdrawal forces, as well as contact resitance values could change due to the quality of the coating. Therefore, please evaluate beforehand.

Warning 6. This product is not hot pluggable.
Warning 7. Keep your fingers and other conductors from coming into contact with the electrically charged parts in order to avoid electrical shock or a short circuit.
2 8 After November 1, 2023, we will gradually switch to products with connector size indication, compatible wire size indication, and lock mark indication.
Some products do not have connector size indication, compatible wire size indication, or lock mark indication.

Table.1 Number of contacts and width

HRS No.	Part No.	Number of Contacts	A
142-0214-0-00	EF2A-D150B-1	1	$40.5^{+1.5}_{-0.5}$
142-0215-0-00	EF2A-D150B-2	2	70^{+2}_{-1}
142-0216-0-00	EF2A-D150B-3	3	$99.5^{+2.5}_{-1.5}$
142-0217-0-00	EF2A-D150B-4	4	$129^{+3}_{-1.5}$
142-0218-0-00	EF2A-D150B-5	5	$158.5^{+3}_{-1.5}$

NO.	MATERIAL	FINISH , REMARKS	NO.	MATERIAL	FINISH , REMARKS
5	m-PPE	(Black) UL94V-0	10	m-PPE	(Black) UL94V-0
4	m-PPE	(Black) UL94V-0	9	m-PPE	(Black) UL94V-0
3	m-PPE	(Black) UL94V-0	8	Stainless steel	
2	Copper	Tin plating 1μm min	7	PBT	(Red) UL94V-0
1	Stainless steel		6	PBT	(Black) UL94V-0

UNITS	SCALE	COUNT	DESCRIPTION OF REVISIONS	DESIGNED	CHECKED	DATE
mm	1 : 1	2 4	DIS-C-00016615	HR. SATO	KI. NAGANUMA	20231218

HIROSE ELECTRIC CO., LTD.

APPROVED	: TP. KOMATSU	20200304	DRAWING NO.	EDC-385107-00-00
CHECKED	: TP. KOMATSU	20200227	PART NO.	EF2A-D150B-*
DESIGNED	: EK. KIDO	20200226	CODE NO.	CL142
DRAWN	: EK. KIDO	20200226		2 1/1