Jan.1.2026 Copyright 2026 HIROSE ELECTRIC CO., LTD. All Rights Reserved.
In case of consideration for using Automotive equipment / device which demand high reliability, kindly contact our sales window correspondents.

	COUNT	DESCRIPTION OF REVISIONS	BY	CHKD	DATE		COUNT	DESCRIPTION OF REVISIONS	BY	CHKD	DATE
△					. .	△					. .
△					. .	△					. .
△					. .	△					. .

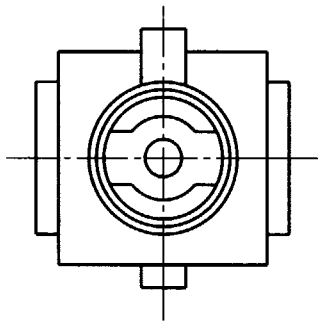

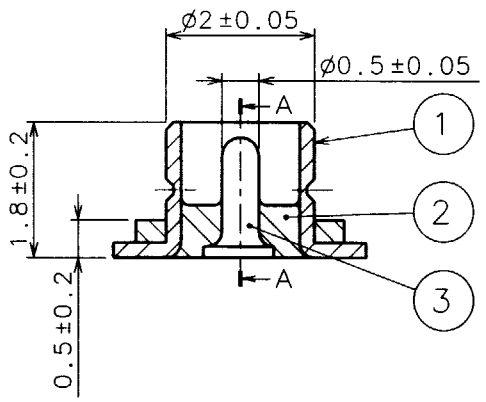

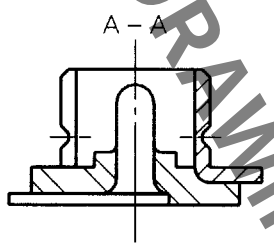

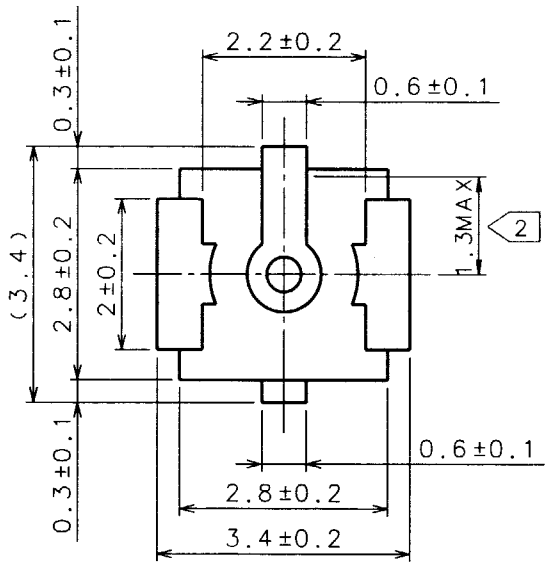

RECOMMENDED PC BOARD
PATTERN DRAWING(5:1)

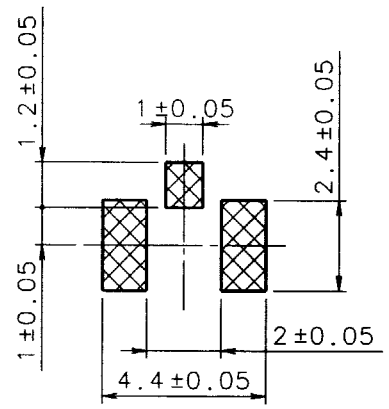

HRS DRAWING FOR REFERENCE

NOTE 1: THE QUANTITY OF E.FL-R-SMT(01) IS 100 CONNECTORS PER PACK.

2: THIS DIMENSION SHOWS THE ALLOWABLE RANGE THAT THE RESIN IS PUT OVER THE CENTER CONTACT.

3: LEAD CO-PLANARITY SHALL BE 0.1 MAX.

NO.	MATERIAL	FINISH, REMARKS	NO.	MATERIAL	FINISH, REMARKS
2	LCP	(BLACK). UL94V-0			
1	PHOSPHOR BRONZE	SILVER PLATED	3	BRASS	GOLD PLATED

CODE NO.(OLD)	DRAWN	DESIGNED	CHECKED	APPROVED	RELEASED
	K.Omaiyumi 98.8.3	K.Omaiyumi 98.8.3	K. Shimizu 98.8.3	I. Mitani 98.8.19	

SCALE 10 : 1	DRAWING NO. EDC3-130348-01	PART NO. E.FL-R-SMT(01)
UNITS mm	HRS HIROSE ELECTRIC CO.,LTD.	CODE NO. CL331-0421-1-01 1/1

TO
RF
USA

FORM NO.229 RF