Nov.1.2025 Copyright 2025 HIROSE ELECTRIC CO., LTD. All Rights Reserved.
In case of consideration for using Automotive equipment / device which demand high reliability, kindly contact our sales window correspondents.

	COUNT	DESCRIPTION OF REVISIONS	BY	CHKD	DATE		COUNT	DESCRIPTION OF REVISIONS	BY	CHKD	DATE
△					. .	△					. .
△					. .	△					. .
△					. .	△					. .

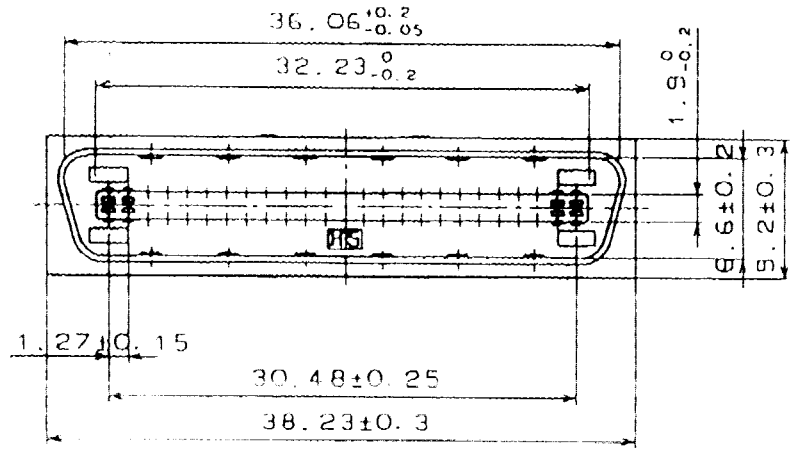

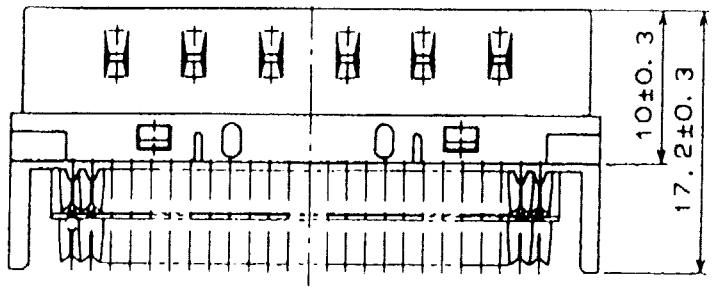

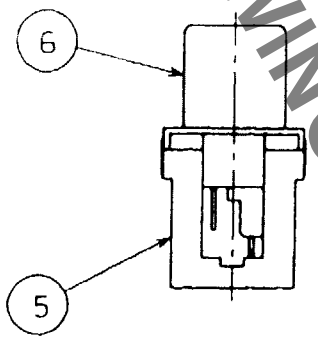

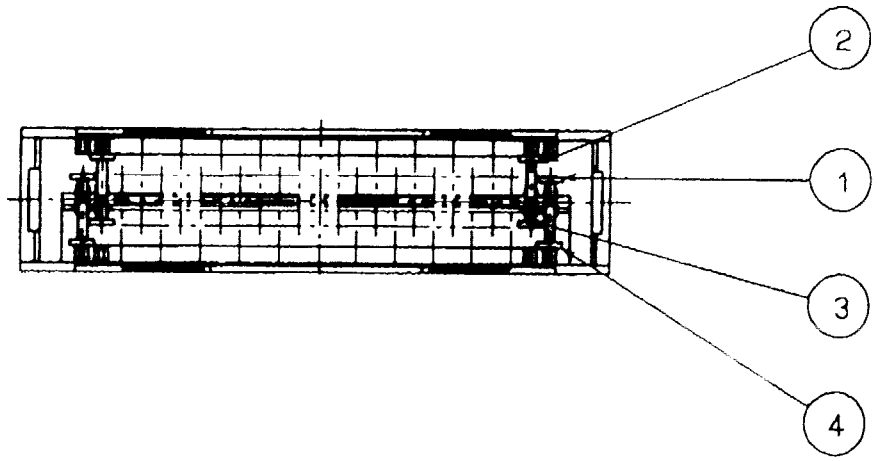

7 ATTACHED PARTS

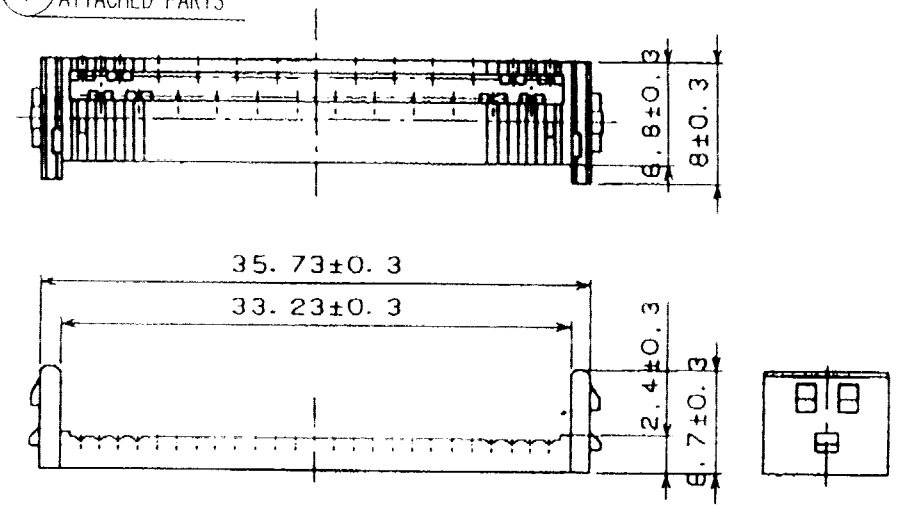

8 ATTACHED PARTS

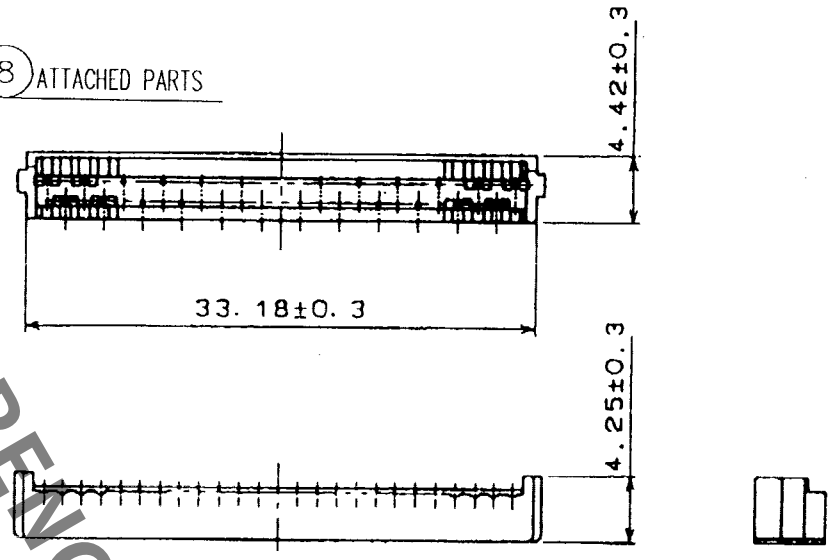

HRS DRAWING FOR REFERENCE

NO.	MATERIAL	FINISH, REMARKS	NO.	MATERIAL	FINISH, REMARKS
4	PHOSPHOR BRONZE	SELECTIVE GOLD PLATING 0.2μm	8	PBT	UL94V-0(BLACK)
3	PHOSPHOR BRONZE	SELECTIVE GOLD PLATING 0.2μm	7	PBT	UL94V-0(BLACK)
2	PHOSPHOR BRONZE	SELECTIVE GOLD PLATING 0.2μm	6	STEEL	NICKEL PLATING
1	PHOSPHOR BRONZE	SELECTIVE GOLD PLATING 0.2μm	5	PBT	UL94V-0(MILKY-WHITE)

CODE NO.(OLD)	DRAWN	DESIGNED	CHECKED	APPROVED	RELEASED
CL	03.9.24	03.9.24	03.09.25	03.09.25	. .

SCALE 2 : 1	DRAWING NO. EDC3-027486-01	PART NO. DX31A-50P(50)
UNITS mm	HRS HIROSE ELECTRIC CO., LTD	CODE NO. CL230-0032-5-50
		1/1

TO
Q

FORM NO.229