Jan.1.2026 Copyright 2026 HIROSE ELECTRIC CO., LTD. All Rights Reserved.
In case of consideration for using Automotive equipment / device which demand high reliability, kindly contact our sales window correspondents.

	COUNT	DESCRIPTION OF REVISIONS	BY	CHKD	DATE		COUNT	DESCRIPTION OF REVISIONS	BY	CHKD	DATE
△					. .	△					. .
△					. .	△					. .
△					. .	△					. .

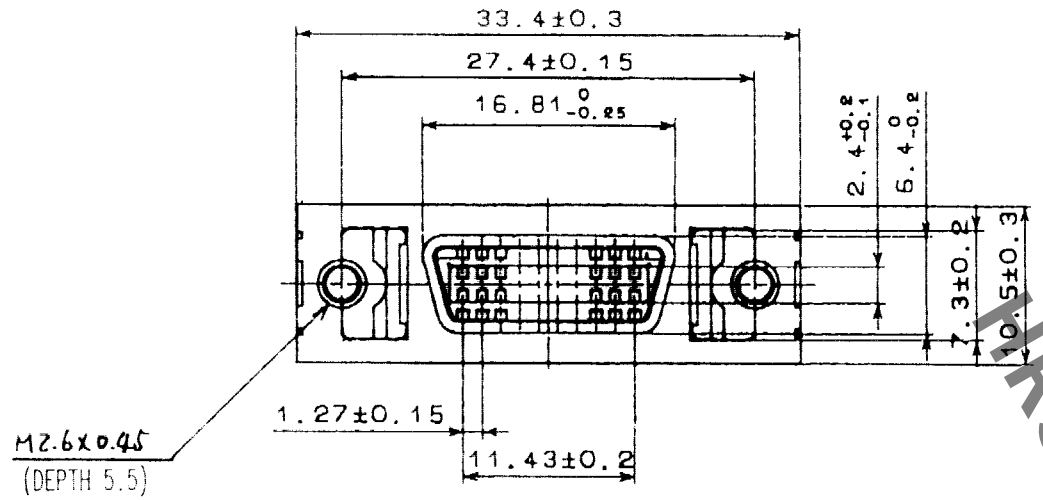

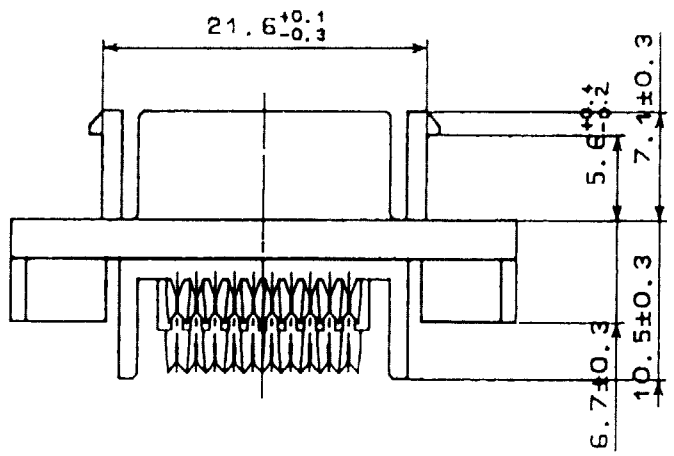

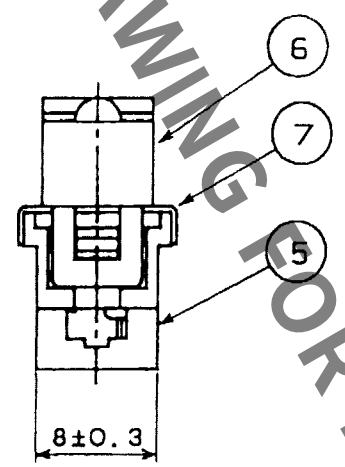

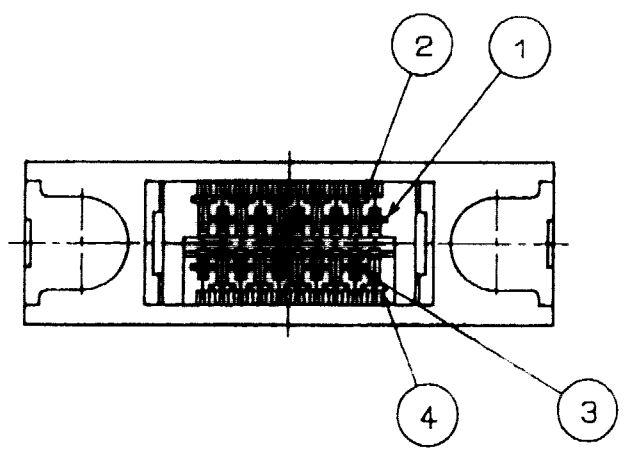

8 ATTACHED PARTS

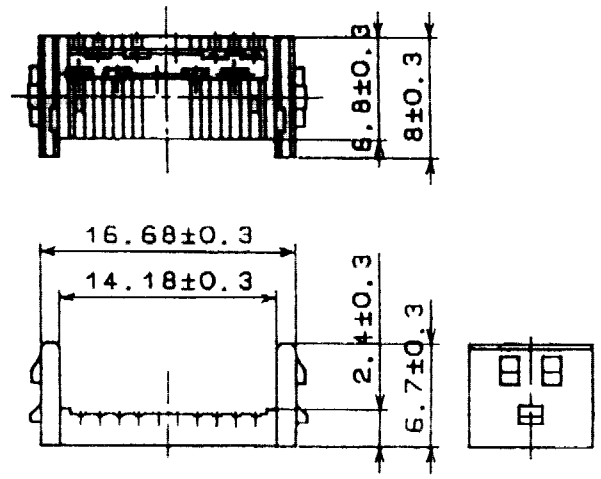

9 ATTACHED PARTS

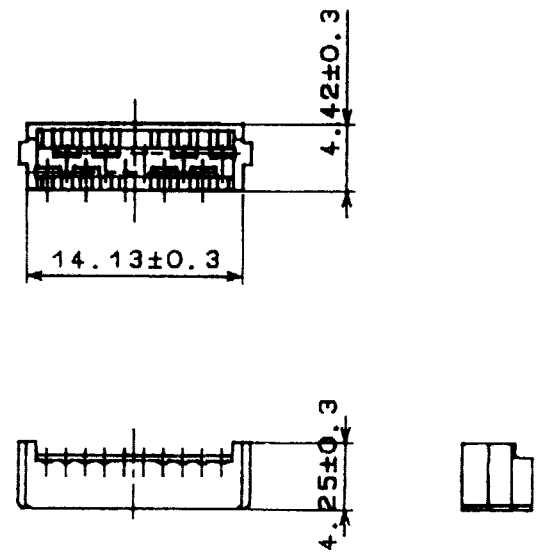

NO.	MATERIAL	FINISH, REMARKS	NO.	MATERIAL	FINISH, REMARKS
5	PBT	UL94V-0(MILKY-WHITE)			
4	PHOSPHOR BRONZE	SELECTIVE GOLD PLATING 0.2μm	9	PBT	UL94V-0(BLACK)
3	PHOSPHOR BRONZE	SELECTIVE GOLD PLATING 0.2μm	8	PBT	UL94V-0(BLACK)
2	PHOSPHOR BRONZE	SELECTIVE GOLD PLATING 0.2μm	7	STEEL	NICKEL PLATING
1	PHOSPHOR BRONZE	SELECTIVE GOLD PLATING 0.2μm	6	ZINC ALLOY DIE CASTING	NICKEL PLATING

CODE NO.(OLD)	DRAWN	DESIGNED	CHECKED	APPROVED	RELEASED
CL	T. Hamaya 03.10.7	T. Hamaya 03.10.7	Y. Enami 03.10.08	H. Miura 03.10.09	. .

SCALE 2 : 1	DRAWING NO. EDC3-040144-02	PART NO. DX31A-20S(50)
UNITS mm	HRS HIROSE ELECTRIC CO., LTD	CODE NO. CL230-0101-6-50 1/1

FORM NO.229

TO
Q

HRS DRAWING FOR REFERENCE