Oct.1.2025 Copyright 2025 HIROSE ELECTRIC CO., LTD. All Rights Reserved.
In case of consideration for using Automotive equipment / device which demand high reliability, kindly contact our sales window correspondents.

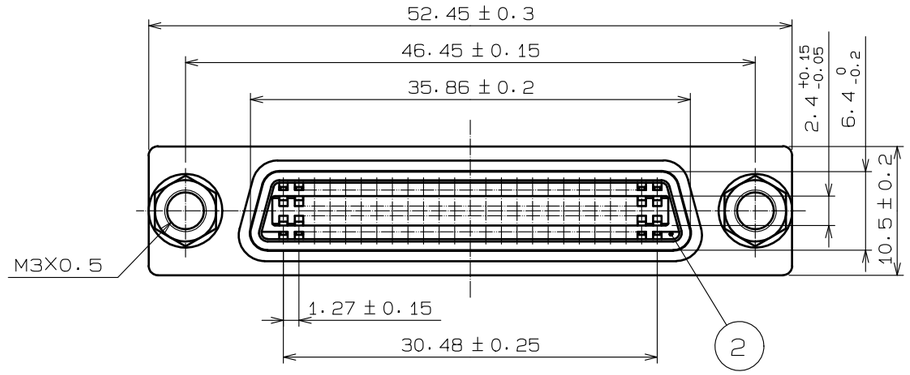

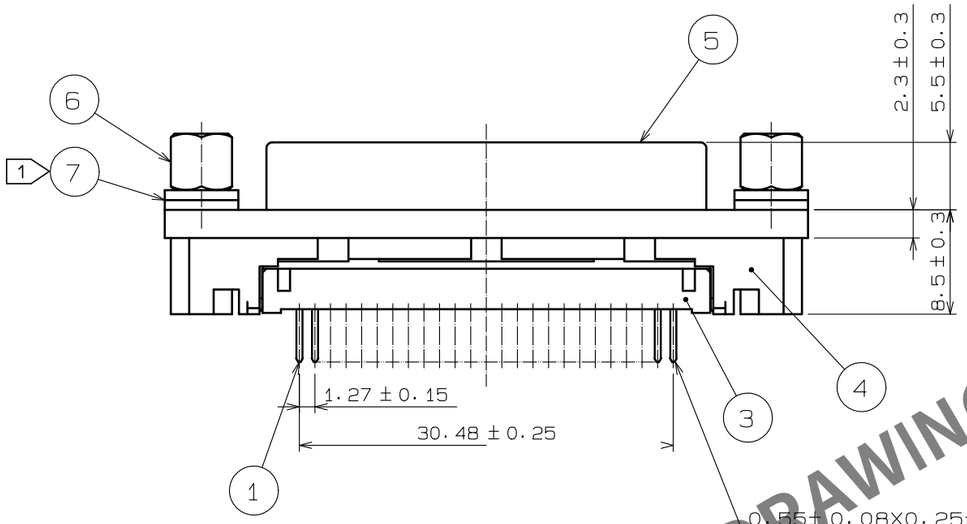

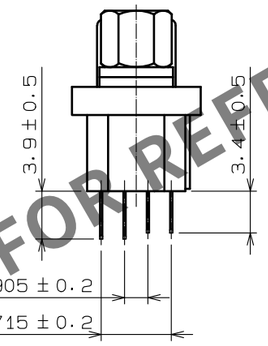

RECOMMENDED PC BOARD PATTERN

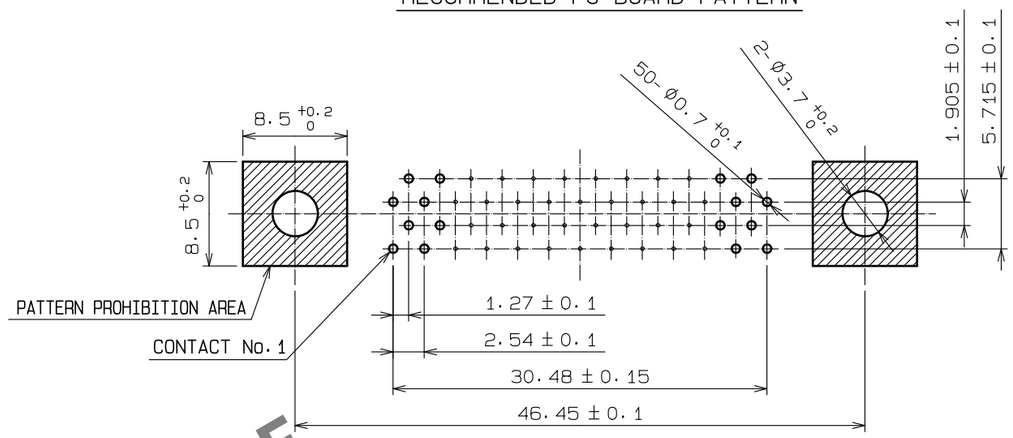

RECOMMENDED PANEL CUOUT

(PANEL THICKNESS : 1.6mm MAX)

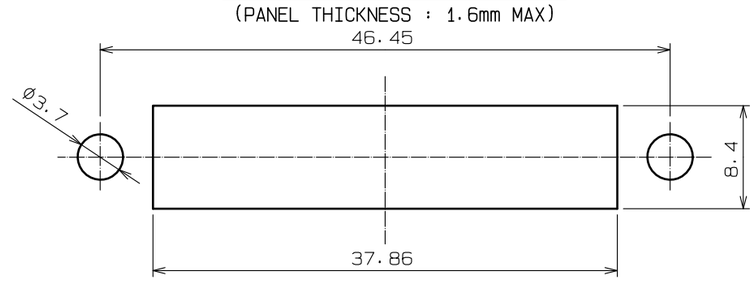

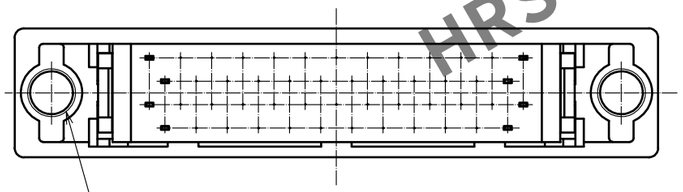

M3.5X0.6

(EFFECTIVE SCREW LENGTH 3.0 min)

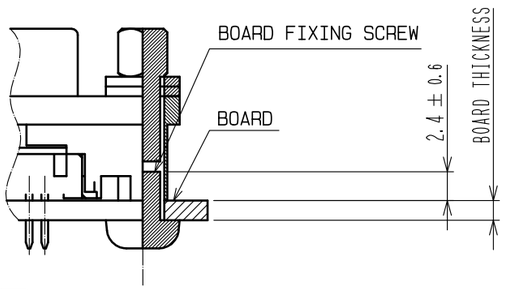

△2 2 PRODUCT - BOARD MOUNTED

NOTES 1 PART No. 7 SHALL BE FINISHED AS TABLE SHOWN BELOW ACCORDING TO PANEL THICKNESS.
(WASHER THICKNESS : 0.8)

PANEL THICKNESS	No. OF WASHER
t=0.7~1.0	2 EACH
t=1.5~1.8	1 EACH

△2 2 This product must be screwed to the board.
Please prepare the screws by the customer.
<SCREW REQUIREMENTS>
NOMINAL DIAMETER: M3.5 x 0.6
SCREW LENGTH : 2.4 ± 0.6 + BOARD thickness 't'

NO.	MATERIAL	FINISH , REMARKS
4	ZINC ALLOY DIE CASTING	OVER: NICKEL PLATING 2μm min UNDER: COPPER PLATING 10μm min
3	PBT	UL94V-0(BLACK)
2	PBT	UL94V-0(BLACK)
1	PHOSPHOR BRONZE	CONTACT: GOLD PLATING 0.2μm min DIP GOLD PLATING 0.03μm min UNDER: COPPER PLATING 2μm min

NO.	MATERIAL	FINISH , REMARKS
7	STEEL	OVER: NICKEL PLATING 2μm min UNDER: COPPER PLATING 3μm min
6	BRASS	OVER: NICKEL PLATING 2μm min UNDER: COPPER PLATING 1μm min
5	STEEL	OVER: NICKEL PLATING 1μm min UNDER: COPPER PLATING 5μm min

UNITS	SCALE		COUNT	DESCRIPTION OF REVISIONS	DESIGNED	CHECKED	DATE
mm	2 : 1	△2	3	DIS-E-00010989	KG. OKITA	MN. KENJO	20220908

HIROSE ELECTRIC CO., LTD.

APPROVED	: HO. MIWA	20050105	DRAWING NO.	EDC3-044241-03
CHECKED	: YH. ENAMI	20050105	PART NO.	DX20A-50S(50)
DESIGNED	: TU. TANIGUCHI	20050105	CODE NO.	CL0230-0272-9-50 △2 1/1
DRAWN	: TU. TANIGUCHI	20050105		

HRS DRAWING FOR REFERENCE