Jan.1.2026 Copyright 2026 HIROSE ELECTRIC CO., LTD. All Rights Reserved.
In case of consideration for using Automotive equipment / device which demand high reliability, kindly contact our sales window correspondents.

COUNT	DESCRIPTION OF REVISIONS	BY	CHKD	DATE	COUNT	DESCRIPTION OF REVISIONS	BY	CHKD	DATE

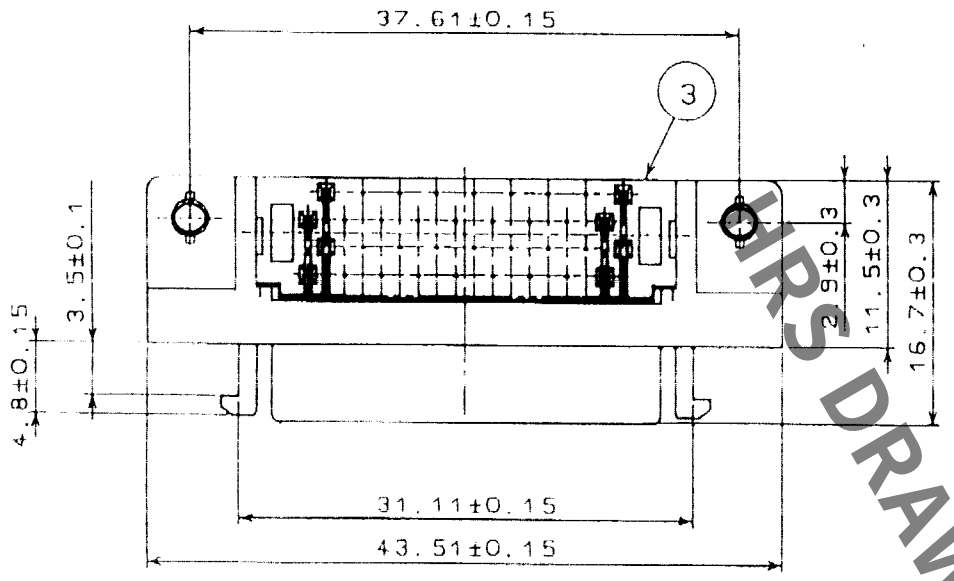

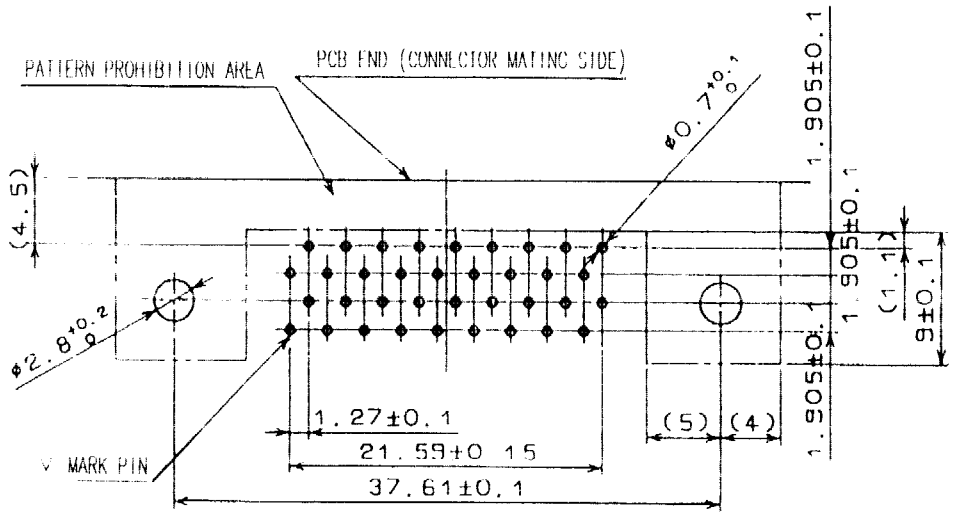

RECOMMENDED PC BOARD PATTERN
(RECOMMENDED BOARD THICKNESS 1.6 mm)

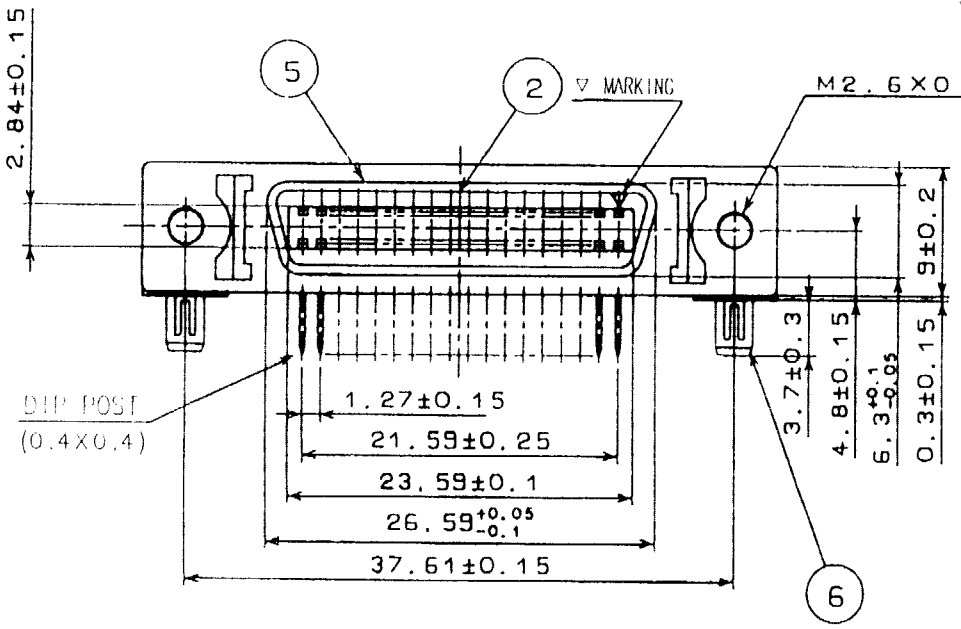

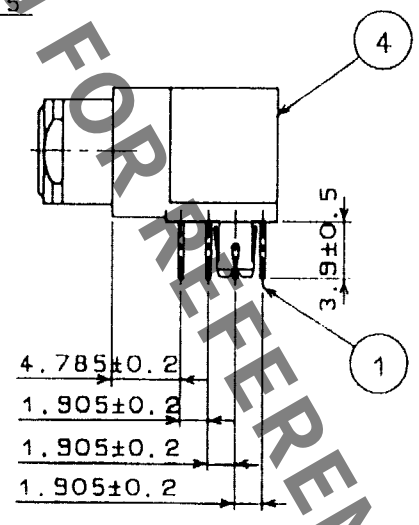

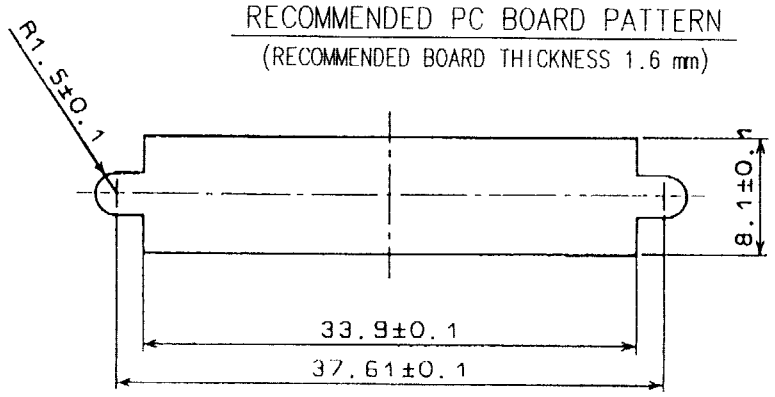

PANEL CUTOUT
(PANEL THICKNESS TO BE 1.6 mm MAX)

HRS DRAWING FOR REFERENCE

NO.	MATERIAL	FINISH, REMARKS	NO.	MATERIAL	FINISH, REMARKS
3	PBT	UL94V-0(BLACK)	6	PHOSPHOR BRONZE	TIN PLATING
2	PBT	UL94V-0(BLACK)	5	STEEL	NICKEL PLATING
1	PHOSPHOR BRONZE	SELECTIVE GOLD PLATING 0.3μm	4	ZINC ALLOY DIE CASTING	NICKEL PLATING

CODE NO.(OLD)	DRAWN	DESIGNED	CHECKED	APPROVED	RELEASED
CL	O Hayashi 03.10.15	O Hayashi 03.10.15	Y. Enami 03.10.16	H Miura 03.10.16	. .

SCALE 2 : 1	DRAWING NO. EDC3-042067-01	PART NO. DX10M-36SE(50)
UNITS mm	HRS HIROSE ELECTRIC CO., LTD	CODE NO. CL230-5069-2-50

1/1

TO
Q

FORM NO.229