Oct.1.2025 Copyright 2025 HIROSE ELECTRIC CO., LTD. All Rights Reserved.
In case of consideration for using Automotive equipment / device which demand high reliability, kindly contact our sales window correspondents.

	COUNT	DESCRIPTION OF REVISIONS	BY	CHKD	DATE		COUNT	DESCRIPTION OF REVISIONS	BY	CHKD	DATE
△					. .	△					. .
△					. .	△					. .
△					. .	△					. .

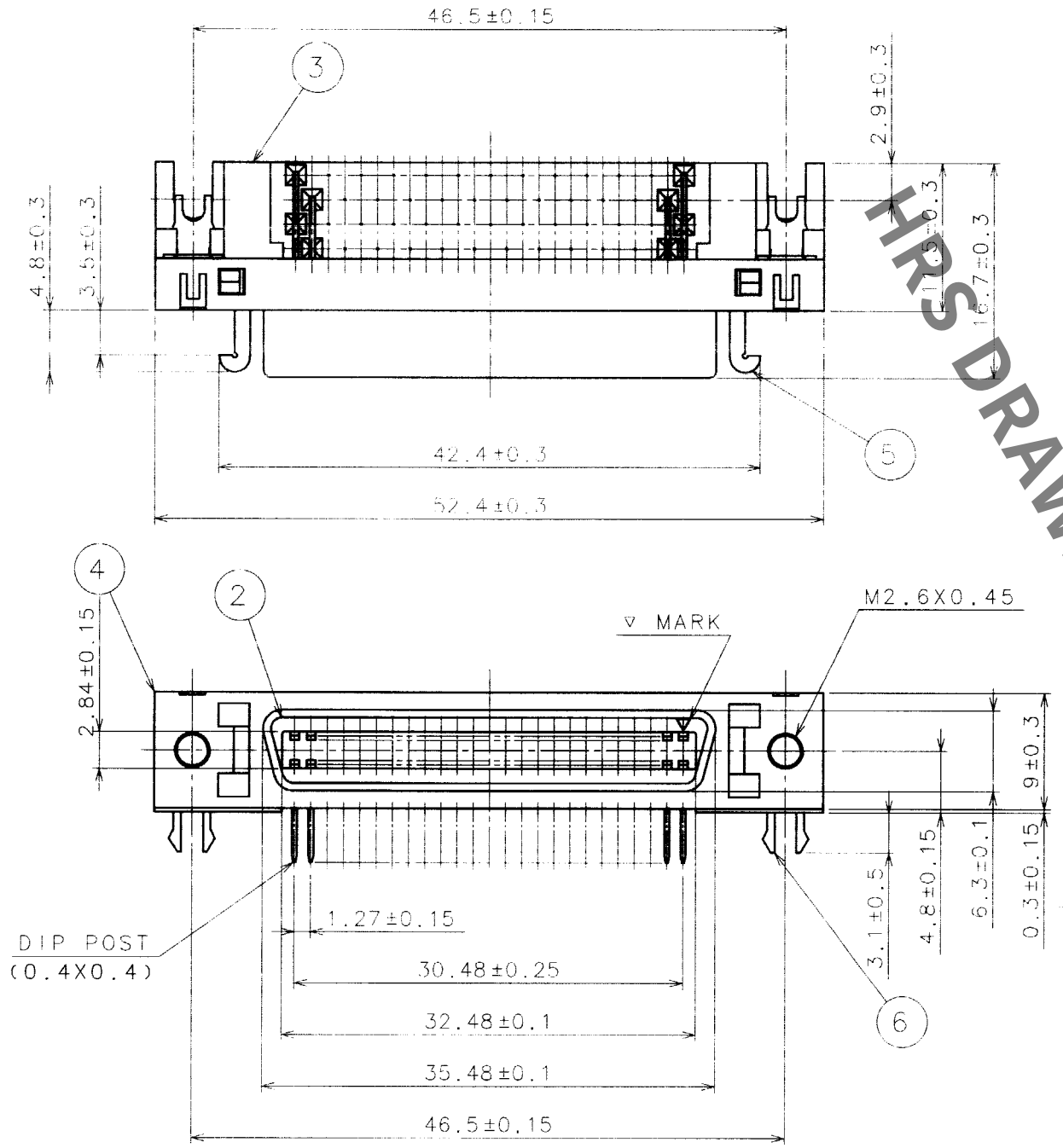

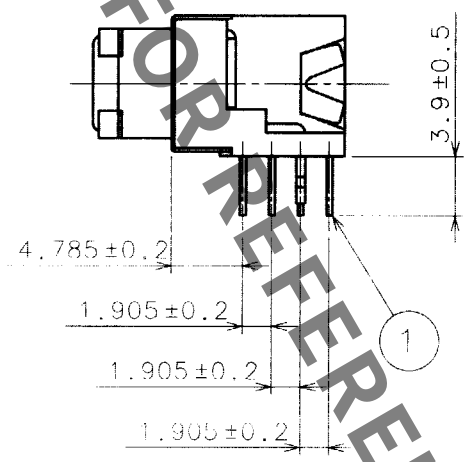

MOUNTED CONNECTOR ON PCB

(PCB THICKNESS 1.6mm)

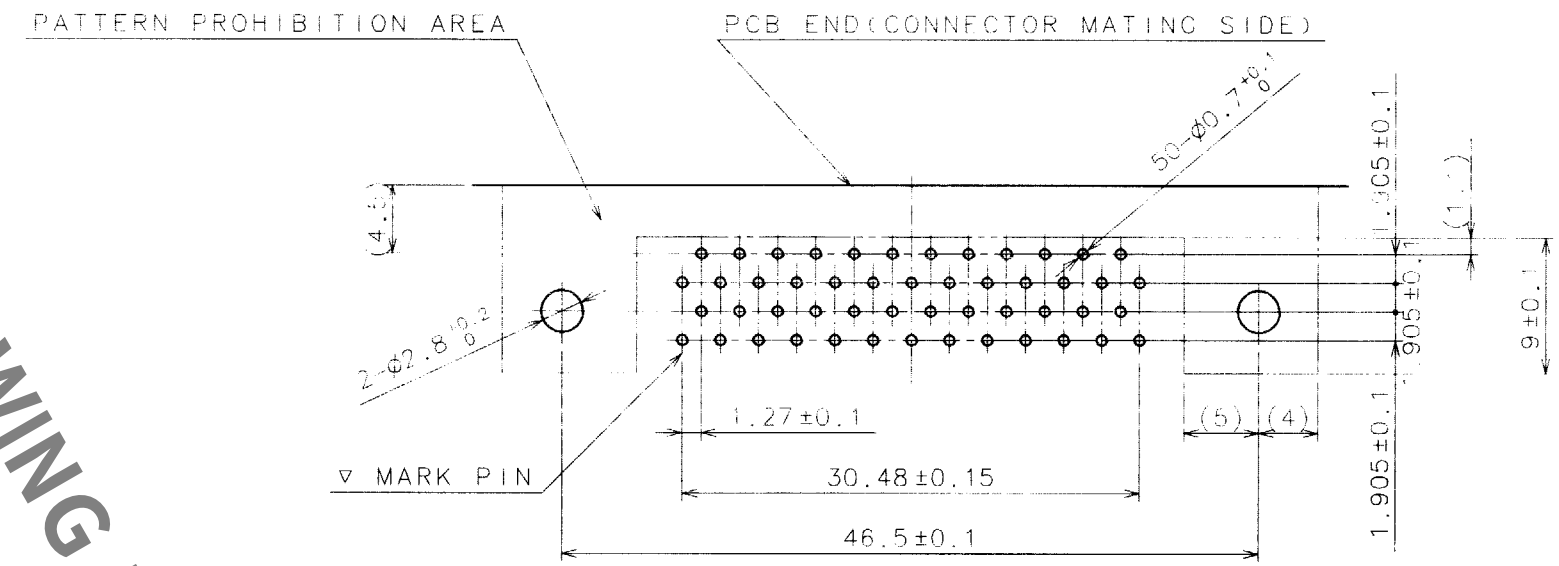

PANEL CUTOUT

(PANEL THICKNESS SHALL BE 1.6mm MAX.)

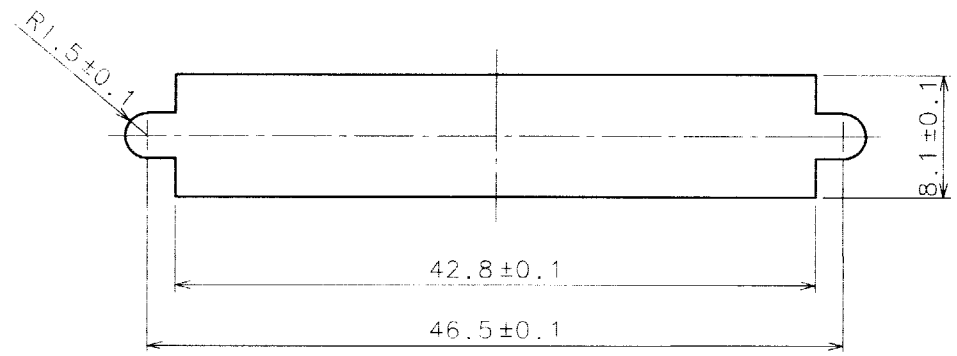

HRS DRAWING FOR REFERENCE

NO.	MATERIAL	FINISH, REMARKS	NO.	MATERIAL	FINISH, REMARKS
3	PBT	(BLACK)UL94V-0	6	BRASS	TIN PLATING
2	PBT	(BLACK)UL94V-0	5	STEEL	NICKEL PLATING
1	PHOSPHOR BRONZE	SELECTIVE GOLD FLASH PLATING	4	STEEL	NICKEL PLATING

CODE NO.(OLD)	DRAWN	DESIGNED	CHECKED	APPROVED	RELEASED
	T.Yamaya 03.10.10	T.Kawada 03.10.10	Y.Enami 03.10.15	H.Miwa 03.10.15	

SCALE 2 : 1	DRAWING NO. EDC3-120261-01	PART NO. DX10G1M-50SE(50)
UNITS mm	HRS HIROSE ELECTRIC CO.,LTD.	CODE NO. CL230-5214-0-50 1/1

FORM NO.229

TO
Q