Jan.1.2026 Copyright 2026 HIROSE ELECTRIC CO., LTD. All Rights Reserved.
In case of consideration for using Automotive equipment / device which demand high reliability, kindly contact our sales window correspondents.

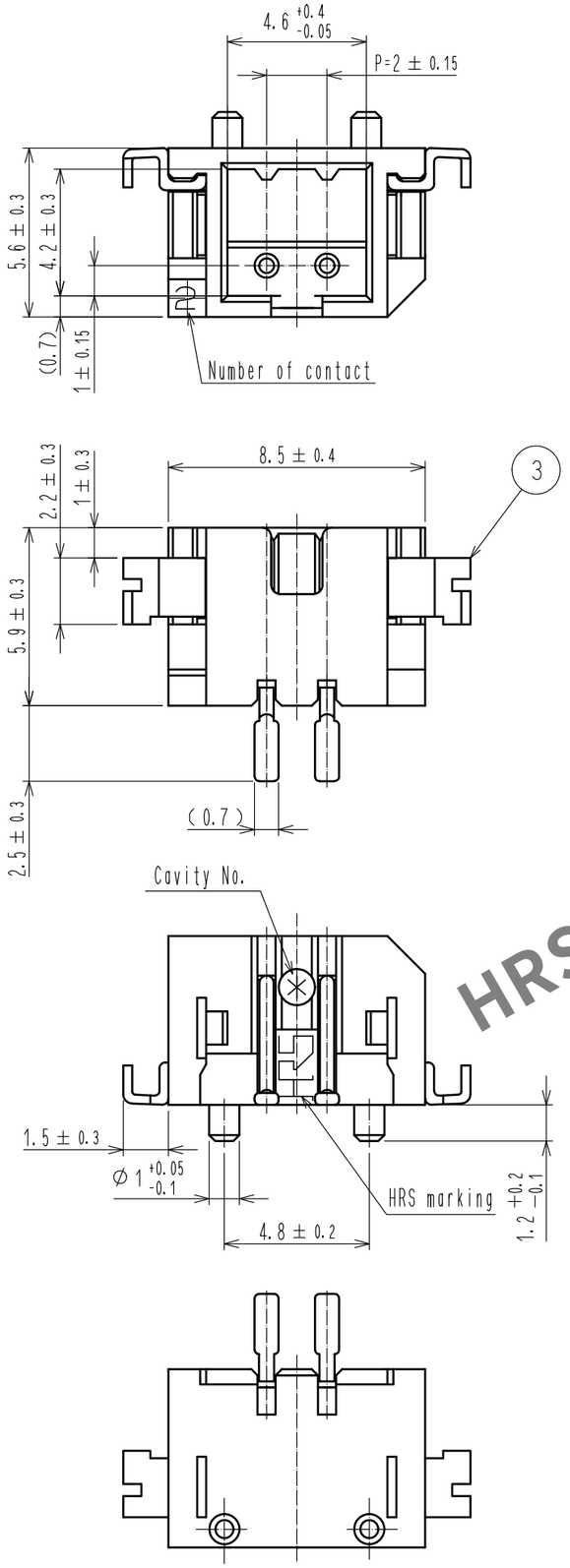

Mated connectors

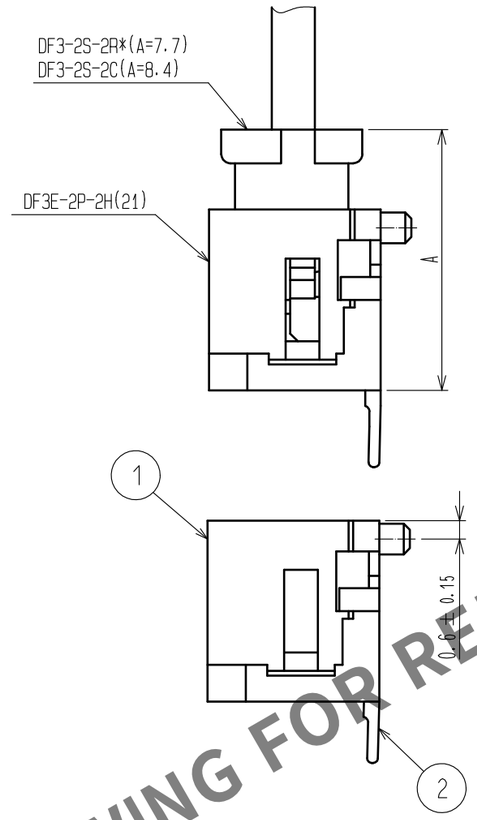

Recommended pattern

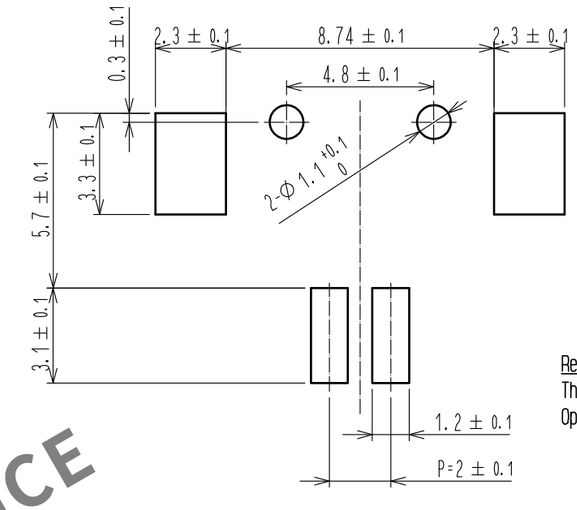

Recommend metal mask
Thickness : 0.15 to 0.2mm
Opening ratio : 100%

HRS DRAWING FOR REFERENCE

Notes 1. Lead co-planarity include reinforced metal fittings shall be 0.1mm MAX.

NO.	MATERIAL	FINISH , REMARKS
2	Brass	Surface:Tin plated 1μm MIN (Under plating)Copper plated 0.5μm MIN
1	Polyamide	Natural(Beige), UL94V-0

NO.	MATERIAL	FINISH , REMARKS
5	Polyester	Clear(Cover tape)
4	PS	Clear(Embossed carrier tape)
3	Brass	Surface:Tin plated 1μm MIN (Under plating)Nickel plated 1μm MIN

UNITS	SCALE	COUNT	DESCRIPTION OF REVISIONS	DESIGNED	CHECKED	DATE
mm	5 : 1	0				

HIROSE ELECTRIC CO., LTD.

APPROVED	: HS. OKAWA	20200227	DRAWING NO.	EDC-367302-21-00
CHECKED	: SZ. ONO	20200227	PART NO.	DF3E-2P-2H(21)
DESIGNED	: SN. MIWA	20200227	CODE NO.	CL543-0343-0-21
DRAWN	: SK. CHIBA	20200227		0 1/2

FORM HC0011-5-7

Jan.1.2026 Copyright 2026 HIROSE ELECTRIC CO., LTD. All Rights Reserved.
In case of consideration for using Automotive equipment / device which demand high reliability, kindly contact our sales window correspondents.

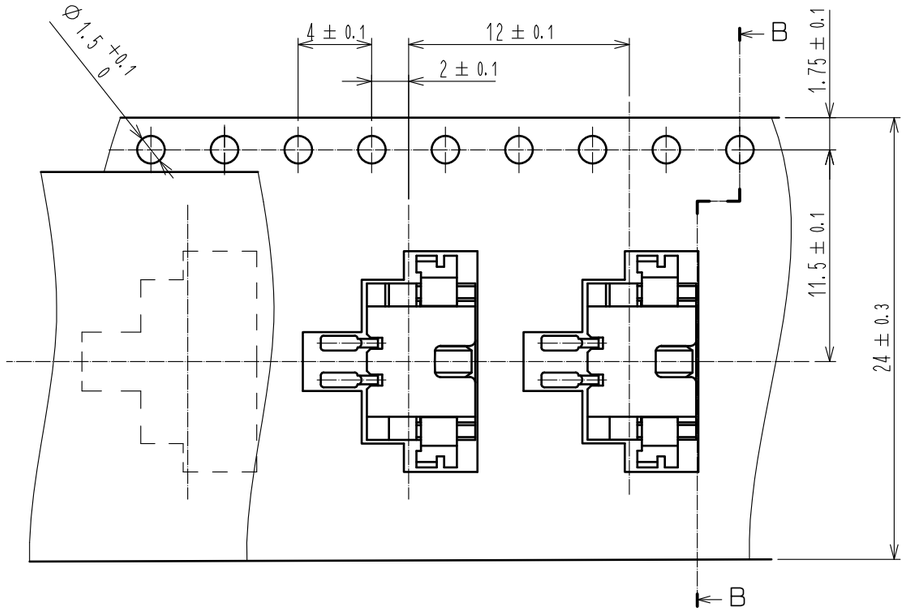

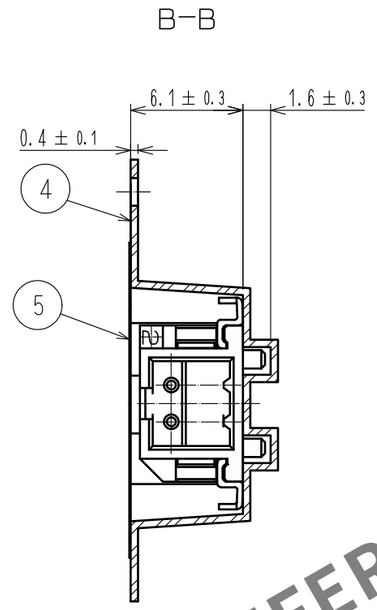

Direction of unreeling

HRS DRAWING FOR REFERENCE

Notes
2. 1 reel 1000 connectors.
3. At the beginning of the reel, 30 boxes shall be empty.
At The end of the reel, 20 boxes shall be empty.
4. When the tape width is 32, 44 and 56 mm, sprocket holes shall be set on both sides of reel as shown on this drawing.

Style and dimension of reel

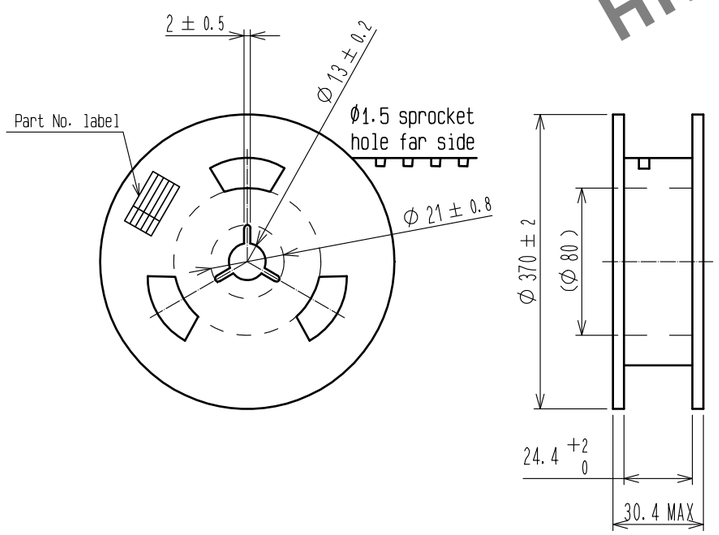

Supplier
Quantity
Part No.
Code No.
Date of manufactured

Detail of Part No. label

生産月日	年　月　日
図番	CL543-0343-0-21
品名	DF3E-2P-2H(21)
納入数量	1000ko
納入者	ヒロセ電機(株)

DRAWING NO.	EDC-367302-21-00
PART NO.	DF3E-2P-2H(21)
CODE NO.	CL543-0343-0-21

0 2/2

FORM HC0011-5-8