Jan.1.2026 Copyright 2026 HIROSE ELECTRIC CO., LTD. All Rights Reserved.
In case of consideration for using Automotive equipment / device which demand high reliability, kindly contact our sales window correspondents.

	COUNT	DESCRIPTION OF REVISIONS	BY	CHKD	DATE		COUNT	DESCRIPTION OF REVISIONS	BY	CHKD	DATE
1	1	RE-H-06215	T.K	H.U	04.04.23						. .
					. .						. .
					. .						. .

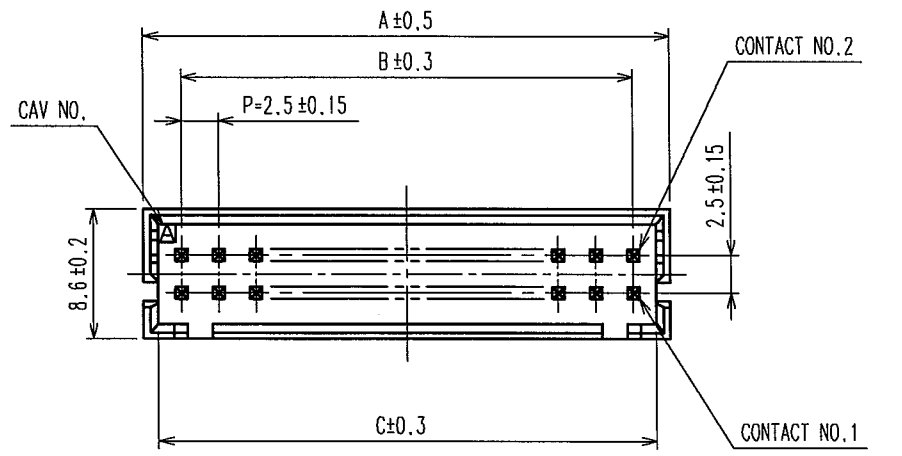

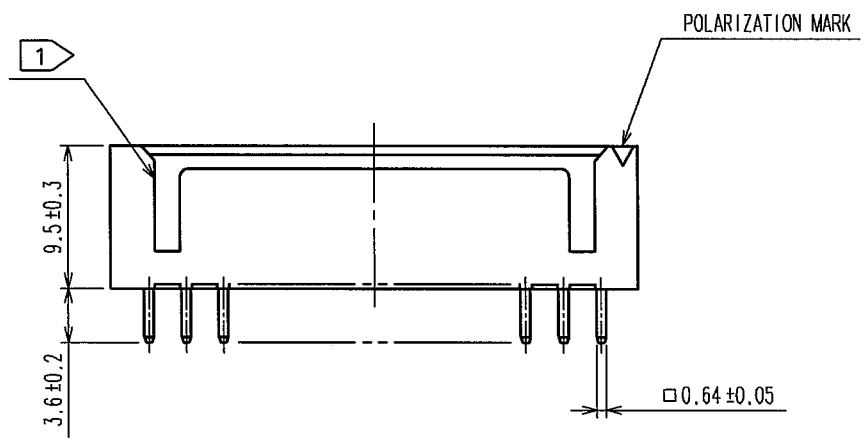

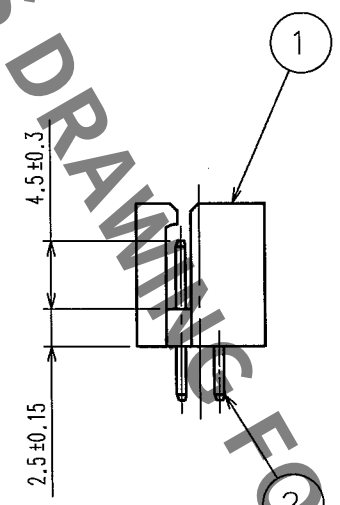

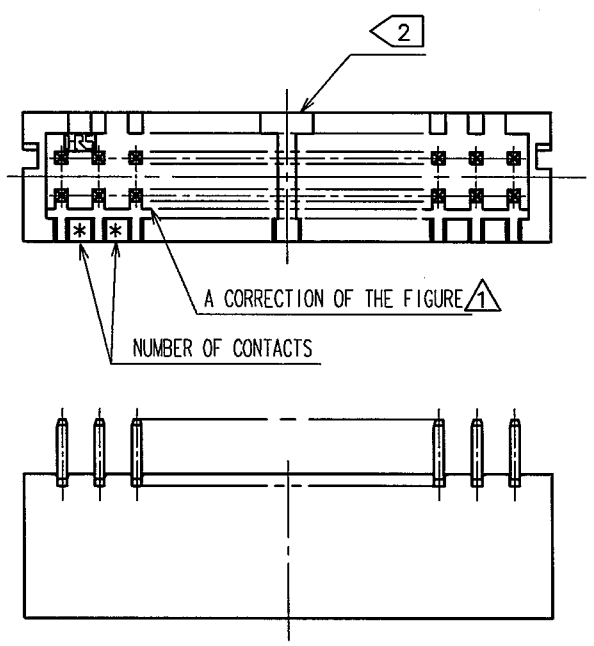

PART NO.	CODE NO.	NUMBER OF CONTACT	A	B	C
DF1BZ- 4DP-2.5DSA	CL541-2017-0	4	7.5	2.5	5.6
DF1BZ- 6DP-2.5DSA	CL541-2018-3	6	10.0	5.0	8.1
DF1BZ- 8DP-2.5DSA	CL541-2019-6	8	12.5	7.5	10.6
DF1BZ-10DP-2.5DSA	CL541-2020-5	10	15.0	10.0	13.1
DF1BZ-12DP-2.5DSA	CL541-2021-8	12	17.5	12.5	15.6
DF1BZ-14DP-2.5DSA	CL541-2022-0	14	20.0	15.0	18.1
DF1BZ-16DP-2.5DSA	CL541-2023-3	16	22.5	17.5	20.6
DF1BZ-18DP-2.5DSA	CL541-2024-6	18	25.0	20.0	23.1
DF1BZ-20DP-2.5DSA	CL541-2025-9	20	27.5	22.5	25.6
DF1BZ-22DP-2.5DSA	CL541-2026-1	22	30.0	25.0	28.1
DF1BZ-24DP-2.5DSA	CL541-2027-4	24	32.5	27.5	30.6
DF1BZ-26DP-2.5DSA	CL541-2028-7	26	35.0	30.0	33.1
DF1BZ-28DP-2.5DSA	CL541-2029-0	28	37.5	32.5	35.6
DF1BZ-30DP-2.5DSA	CL541-2030-9	30	40.0	35.0	38.1
DF1BZ-34DP-2.5DSA	CL541-2031-1	34	45.0	40.0	43.1
DF1BZ-36DP-2.5DSA	CL541-2032-4	36	47.5	42.5	45.6
DF1BZ-40DP-2.5DSA	CL541-2033-7	40	52.5	47.5	50.6

RECOMMENDED PATTERN(5:1)

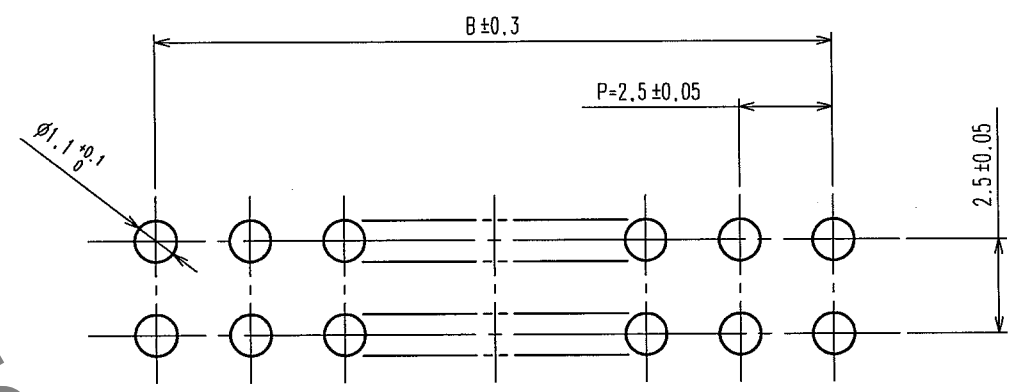

HRS DRAWING FOR REFERENCE

NOTES 1 :FOR 4 AND 6 CONTACTS,ONE MIS-INSERTION DEPRESSION SHALL BE MADE,FOR OTHERS, 2 MIS-INSERTION DEPRESSION AS PER DRAWING.
2 :STAND-OFF SHALL MOVE RIGHT FOR 1.25 WHEN ONE-SIDE,ONE-ROW IS ODD.
(STAND-OFF DESIGN SHALL BE AVAILABLE FOR 8 CONTACTS AND OVER)

NO.	MATERIAL	FINISH, REMARKS
1	POLYAMIDE	UL94V-0,NATURAL(WHITE)
2	BRASS	SURFACE:TIN PLATED 1μm min UNDER PLATING:NICKEL PLATED 0.5μm min

CODE NO.(OLD)	DRAWN	DESIGNED	CHECKED	APPROVED	RELEASED
	F.Matsuki '04.03.25	H.Umehara '04.03.25	T.Miyazaki '04.03.25	T.Oma '04.03.25	

SCALE 2 : 1
UNITS mm

DRAWING NO. EDC3-303247-02

PART NO. DF1BZ-*DP-2.5DSA

HRS HIROSE ELECTRIC CO., LTD

CODE NO. CL541-

1/1

TO