Jan.1.2026 Copyright 2026 HIROSE ELECTRIC CO., LTD. All Rights Reserved.
In case of consideration for using Automotive equipment / device which demand high reliability, kindly contact our sales window correspondents.

	COUNT	DESCRIPTION OF REVISIONS	BY	CHKD	DATE		COUNT	DESCRIPTION OF REVISIONS	BY	CHKD	DATE
△					. .	△					. .
△					. .	△					. .
△					. .	△					. .

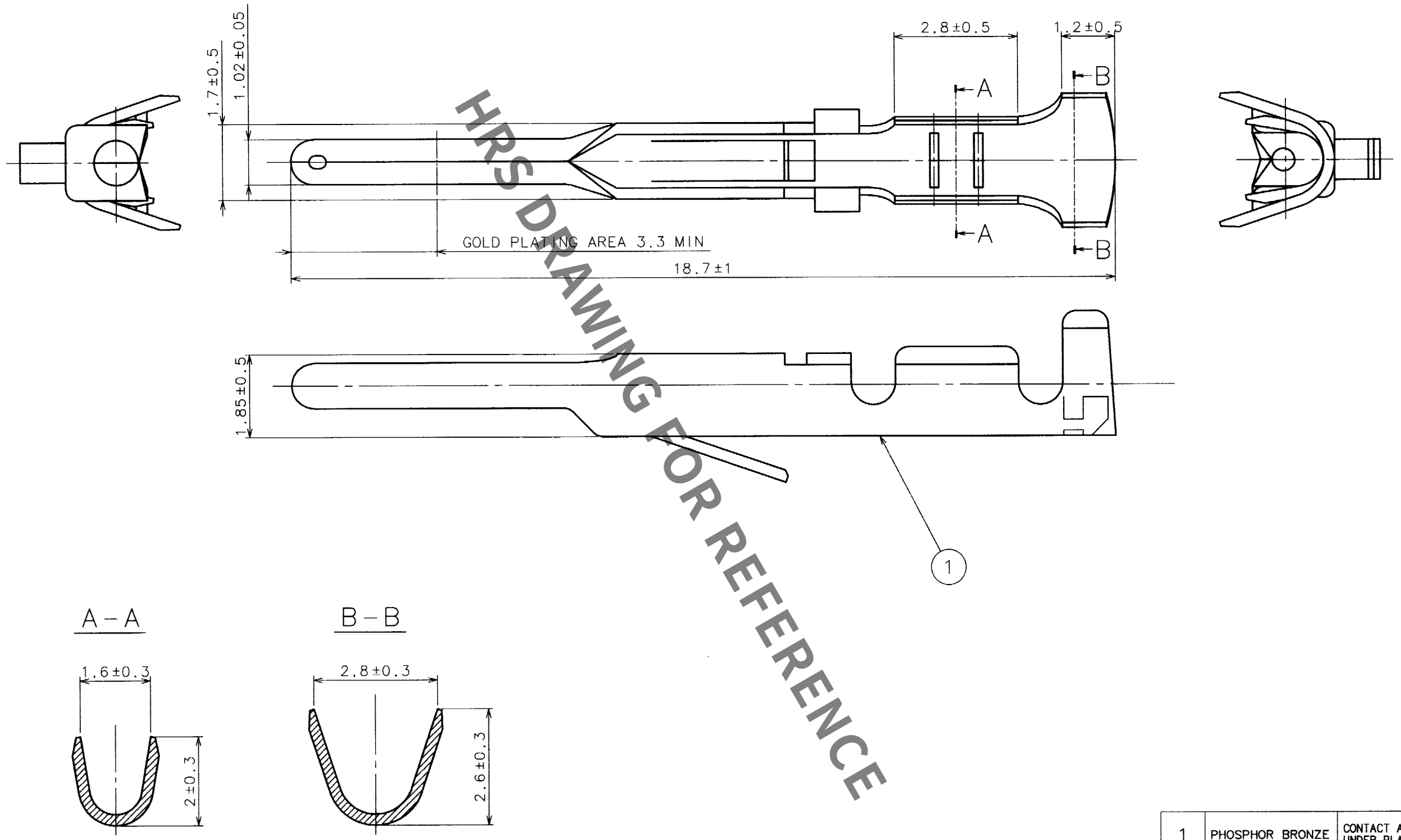

HRS DRAWING FOR REFERENCE

NO.	MATERIAL	FINISH, REMARKS	NO.	MATERIAL	FINISH, REMARKS
			1	PHOSPHOR BRONZE	CONTACT AREA:GOLD 0.2μm min UNDER PLATING:NICKEL 1μm min

CODE NO.(OLD)	DRAWN	DESIGNED	CHECKED	APPROVED	RELEASED
	M. Shimoyama 03·3·31	M. Shimoyama 03·3·31	S. Motegaki 03·3·31	S. Motegaki 03·3·31	. .

SCALE 10 : 1	DRAWING NO. EDC3-009096	PART NO. CD-PC-111
UNITS mm	HRS HIROSE ELECTRIC CO., LTD	CODE NO. CL211-0185-8 1/1

TO
Q1

FORM NO.229