PRODUCT CATALOG

HIROSE ELECTRIC CO., LTD.

BK19 Series

0.3mm Pitch, 0.5mm Stacking Height, 1.2mm Width, Ultra-Low Profile and Narrow Width Hybrid FPC to Board Connector

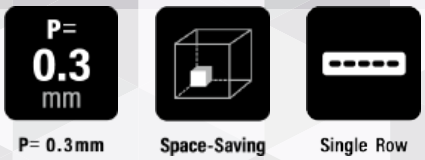

P= 0.3mm | Space-Saving | Single Row

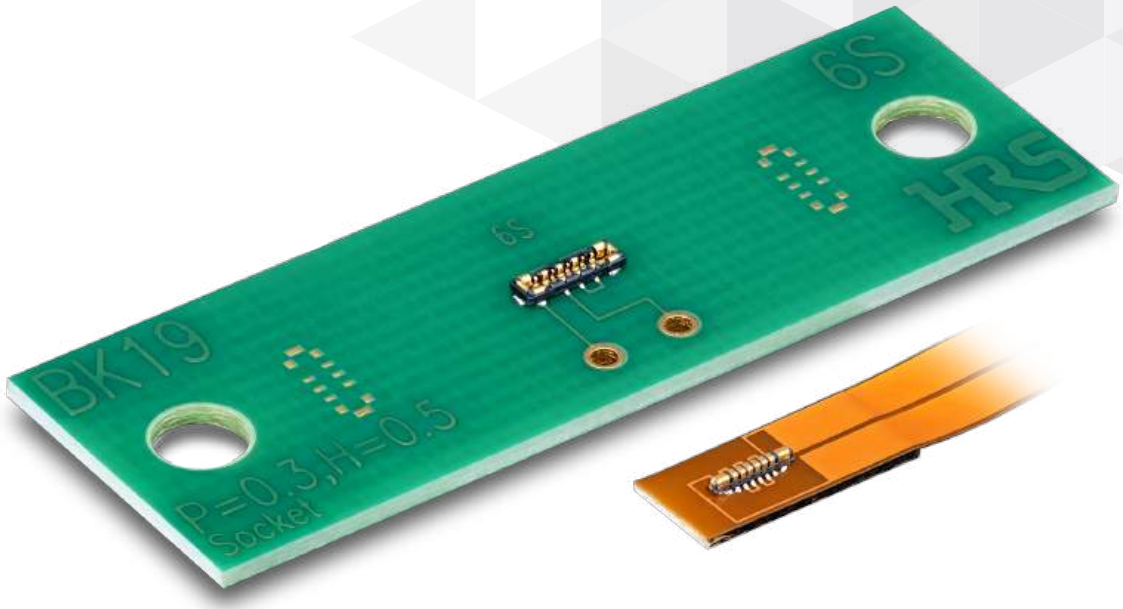

Product Page
https://www.hirose.com/en/product/series/BK19

Apr.2026

Nov.1.2026 Copyright 2026 HIROSE ELECTRIC CO., LTD. All Rights Reserved.

Features

1. Space-saving

The BK19 Series is engineered for ultra-compact pitch, width, and height, enabling greater design flexibility for compact enclosures.

■ Conventional Product
: Double-Row, P=0.35mm, 12pos.

■ BK19 Series
: Single-Row, P=0.3mm, 6pos.

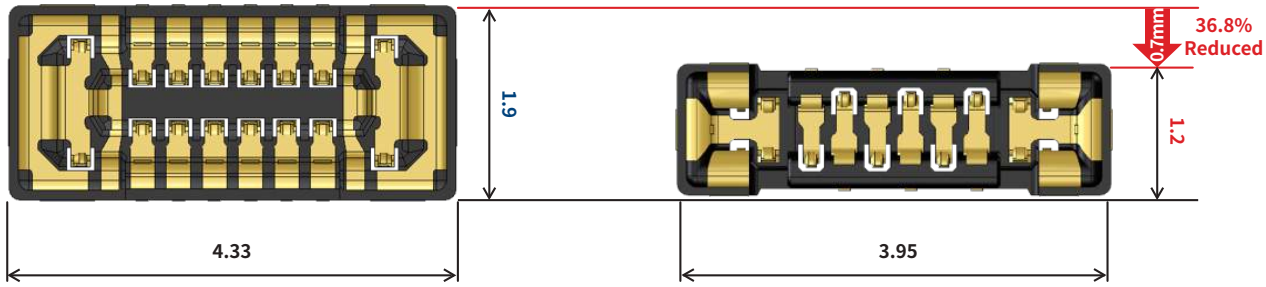

2. Robust Design

Fully armored design helps prevent housing damage caused by mating misalignment.

< Conventional Designs >

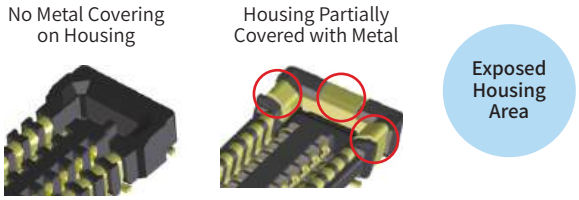

<BK19>

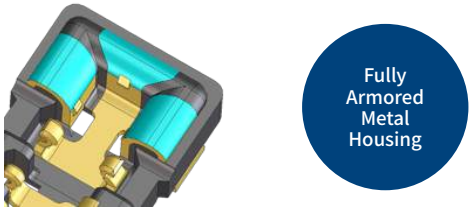

3. Dimpled Contact Lock Design for High Extraction Force

Dimpled lock design on power and signal contacts provides high extraction force.

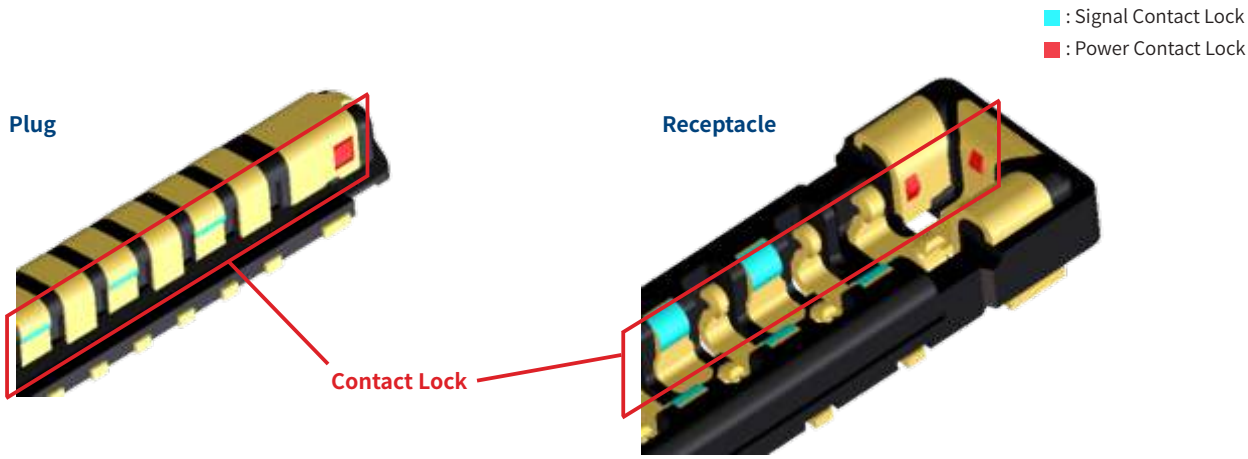

Nov.1.2026 Copyright 2026 HIROSE ELECTRIC CO., LTD. All Rights Reserved.

4. Superior Mating Performance

Wide self-alignment range with metal guide ribs ensures smooth mating
(±0.3 mm in pitch direction, ±0.3 mm in width direction).
In addition, a clear tactile click from the unique locking contact design confirms complete mating.

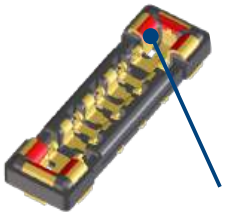

Metal Guide Ribs

Effectively uses dead space to expand self-alignment range when mating

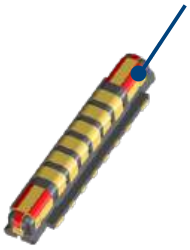

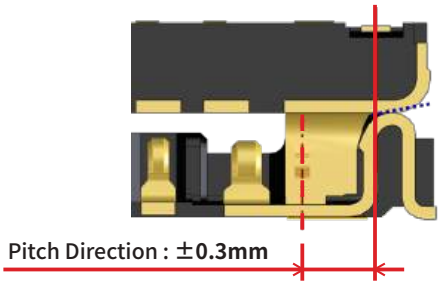

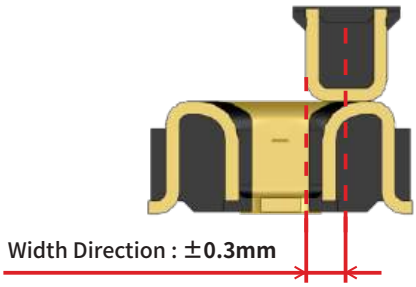

5. High Contact Reliability

The two-point contact design for power and signal contacts ensures high contact reliability.

6. Halogen-Free

All materials and substances used in this product comply with halogen-free requirements,
as defined by IEC 61249-2-21.

- Br: 900 ppm max.
- Cl: 900 ppm max.
- Br+Cl: 1,500ppm max.

Nov.1.2026 Copyright 2026 HIROSE ELECTRIC CO., LTD. All Rights Reserved.

Product Specifications

Rated Current	Signal Contact: 0.3A	Operating Temperature (Note 1)	-55 to +85° C
	Power Contact: 5A	Operating Humidity Range (Note 2)	20 to 80%
Rated Voltage	30V AC/DC	Storage Temperature (Note 3)	-10 to +60° C

Items	Specifications	Conditions
Contact Resistance	Signal Contact : 30mΩ Max. Power Contact : 10mΩ Max.	Measured at 20mV AC, 1kHz, 1mA
Insulation Resistance	50mΩ Min.	Measured at 100V DC
Withstanding Voltage	No flashover or insulation breakdown	100V AC for 1 min.
Mating Durability	Contact Resistance : Signal Contact: 30mΩ Max Power Contact: 30mΩ Max. No damage, cracking, or loosening of components	10 mating cycles
Vibration Resistance	No electrical discontinuity of 1μs or more No damage, cracking, or loosening of components	Frequency: 10 to 55Hz, single amplitude 0.75mm, 10 cycles in each of 3 axis directions for 5 minutes/cycle
Shock Resistance	No electrical discontinuity of 1μs or more No damage, cracking, or loosening of components	Acceleration : 490m/s^2, duration of pulse: 11ms at 3 times for 3 directions.
Humidity Resistance	Contact Resistance : Signal Contact: 30mΩ Max. Power Contact: 30mΩ Max. Insulation Resistance: 25MΩ Min. No damage, cracking, or loosening of components	96 hours at temperature of 40 ± 2°C and humidity range from 90 to 95%
Temperature Cycle	Contact Resistance : Signal Contact: 30mΩ Max. Power Contact: 30mΩ Max. Insulation Resistance: 50MΩ Min. No damage, cracking, or loosening of components	-55°C for 30min. → +85°C for 30 min. for 5 Cycles. (Stabilizing Time In Chamber : Within 2 to 3 min.)
Sulfur Dioxide	Contact Resistance : Signal Contact: 30mΩ Max. Power Contact: 30mΩ Max. No damage, crack or looseness of parts	Exposed in 25 PPM for 96h at 25°C , 75 ± 5%RH. (Test standard : JIS C 60068)

Note 1 : Includes temperature rise caused by current flow.
Note 2 : Range identified without condensation.
Note 3 : The term "storage" refers to long-term-storage of unused items before they are mounted on the PCB.
Operating temperature / humidity range applies to the product in a temporary storage state
such as non-powered after mounting on the PCB during transportation, etc.

Materials / Finish

Part	Component	Material	Finish	UL Standard
Plug Receptacle	Insulator	LCP	Black	UL94V-0
	Signal Contact	Copper Alloy	Gold Plated over Nickel Underplating	-
	Power Contact	Copper Alloy	Gold Plated over Nickel Underplating	-

Product Number Structure

Refer to the chart below when determining the product specifications from the product number.
Please select from the product numbers listed in this catalog when placing orders.

● Plug/Receptacle

BK19C ❶ 05 ❷ – 6 ❸ P ❹ / 2 ❺ – 0.3 ❻ V ❼ (800) ❽

❶ Series Name	BK19	❺ Number of Power Contacts	2pos.
❷ Stacking Height	0.5mm	❻ Contact Pitch	0.3mm
❸ Number of Signal Contacts	6pos.	❼ Terminal Type	V : Straight SMT
❹ Connector Type	P : Single-row Plug S : Single-row Receptacle	❽ Packaging	(800) : Standard, Embossed Tape Packaging (20,000pcs per reel) (895) : Embossed Tape Packaging (1,000pcs per reel)(For trial production)

Nov.1.2026 Copyright 2026 HIROSE ELECTRIC CO., LTD. All Rights Reserved.

Single-Row Plug

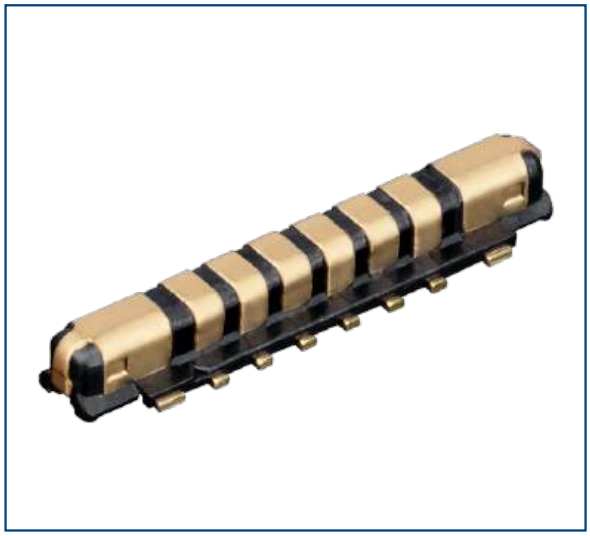

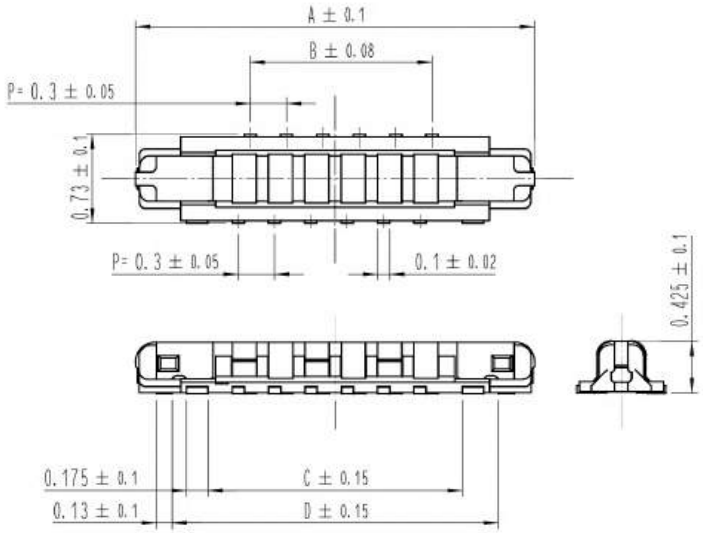

● Recommended PCB Layout

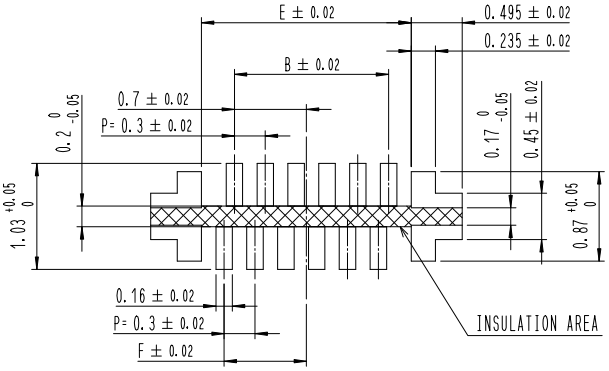

● Recommended Metal Mask Dimensions
(Mask Thickness : 0.08mm)

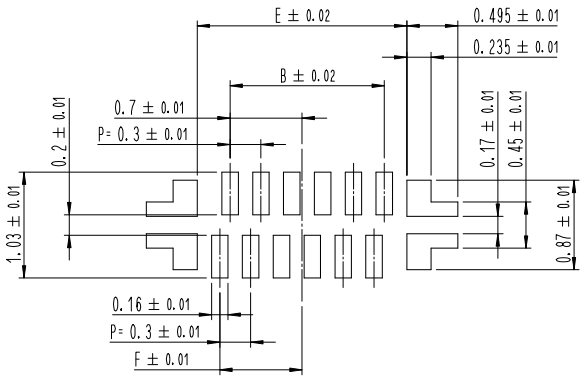

Unit : mm

Part No.	HRS No.	No. of Pos.		A	B	C	D	E	F	Purchase Unit	
		Signal Contact	Power Contact							## : 00	## : 95
BK19C05-6P/2-0.3V(8##)	CL0480-1470-0-##	6	2	3.29	1.5	2.1	2.69	2.04	0.8	20,000pcs per reel	1,000pcs per reel

Nov.1.2026 Copyright 2026 HIROSE ELECTRIC CO., LTD. All Rights Reserved.

Single-Row Receptacle



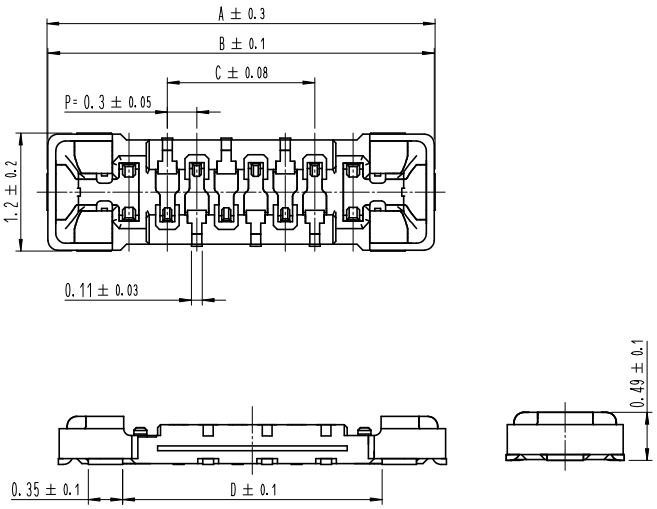

● Recommended PCB Layout

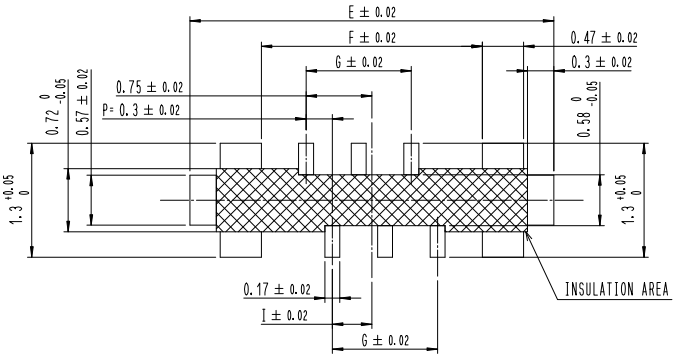

● Recommended Metal Mask Dimensions
(Mask Thickness : 0.08mm)

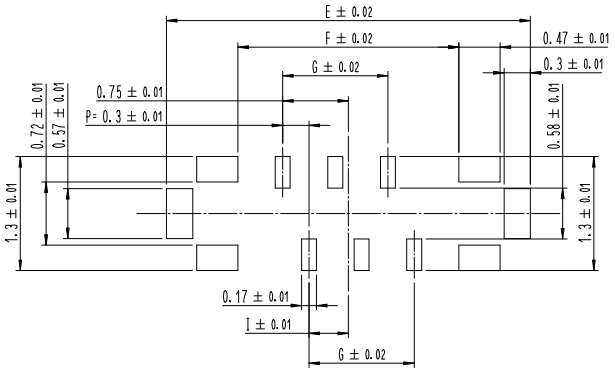

Unit : mm

Part No.	HRS No.	No. of Pos.		A	B	C	D	E	F	G	H	I	Purchase Unit	
		Signal Contact	Power Contact										## : 00	## : 95
BK19C05-6S/2-0.3V(8##)	CL0480-1471-0-##	6	2	3.95	3.93	1.5	2.64	4.15	2.52	1.2	0.75	0.45	20,000pcs per reel	1,000pcs per reel

Nov.1.2026 Copyright 2026 HIROSE ELECTRIC CO., LTD. All Rights Reserved.

Usage Precautions

1. Recommended Solder Temperature Profile	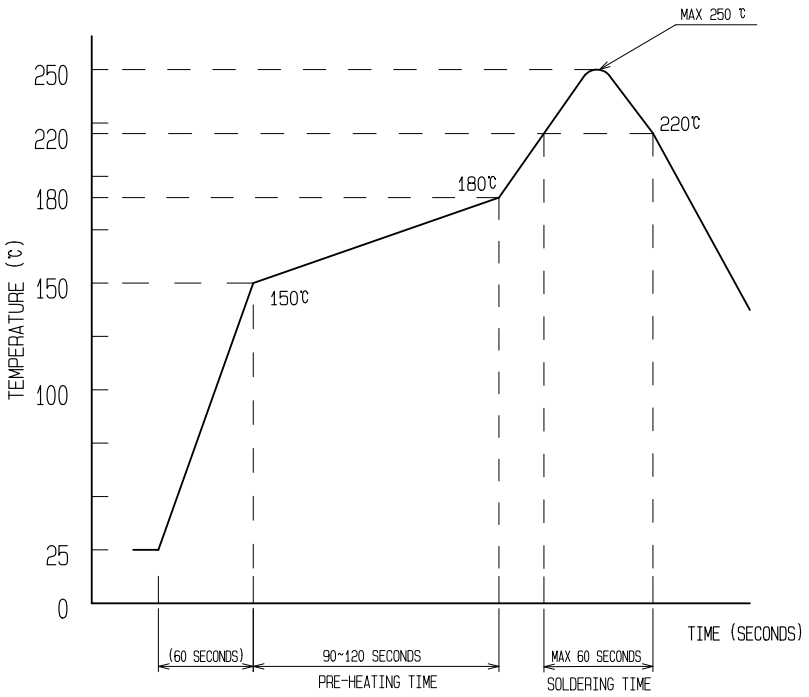 [Conditions] 1. Peak Temperature : Maximum of 250°C 2. Heated Section : 220°C Min., within 60 seconds 3. Preheated Section : 150 to 180°C , 90 to 120 seconds 4. Number of Reflow Cycles : Maximum of 2 cycles Note 1 : The temperature is the surface temperature of the PCB in the vicinity of the connector lead part. Note 2 : When using nitrogen reflow process, please mount the product with an oxygen concentration at a minimum of 1,000ppm. Please contact a Hirose representative if the concentration is below 1,000ppm
2. Recommended Manual Soldering Conditions	Soldering iron temperature: 340 ± 10°C Soldering time : within 3 seconds
3. Recommended Metal Mask Thickness and Open Area Ratio to PCB Pattern Area	Thickness : 0.08mm Aperture ratio : 100% on the plug side, 100% on the receptacle side
4. PCB Warpage	A maximum of 0.02mm at the center of the connector with reference to both ends of the connector.
5. Cleaning	Not recommended. If this product is cleaned, please evaluate the performance before using it. Cleaning may cause a change in the mating/unmating properties as well as environmental resistance.
6. Notes	・Insertion or removal prior to board mounting may result in contact deformation. ・Avoid supporting the PCB only with the connectors. Support it by other means such as bolts, screws, posts, etc. ・Avoid excessive prying mating/unmating as it may result in damage. ・During manual soldering, do not apply flux which will cause solder wicking. ・This product may have slight color differences due to production lot variability, but this does not have any effect on the performance. ・Please refer to the next page for mating/unmating precautions. ・It is advised to secure the mated connectors to the board with housings and cushioning materials because the product can disengage if dropped, by other impact or by FPC routing. ・Do not use the connector outside of the specifications.(i.e., rated current, rated voltage, PCB design and operating environment, etc.). Such usage could lead to material outgassing, ignition, or short-circuit, etc. ・Please use a proper stiffener on the back of the FPC. We recommend using a glass epoxy material with a minimum thickness of 0.3mm or a stainless steel material with a minimum of thickness of 0.2mm.

Nov.1.2026 Copyright 2026 HIROSE ELECTRIC CO., LTD. All Rights Reserved.

Connector Handling Precautions

【Connector Mating Precautions】

1. Align the connectors to the correct mating position.

The connector has guide ribs on the receptacle to ensure proper alignment.
Align the plug with the guide ribs before mating.

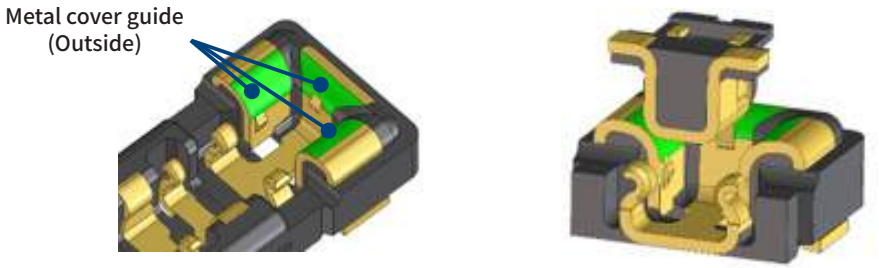

2. Lower the connector into position.

When the connector reaches the correct position, it will naturally drop into place,
indicated by a change in mating height.

3. Confirm parallel alignment before final mating.

Once the connectors have lowered into place, the connector pair will be parallel and should not move forward/backward or left/right. Apply downward force to complete the mating.
(NOTE: please confirm downward is the correct direction)

(Please align the connectors)



(Please align the connectors)



4. Ensure complete mating.

If one side is floating or the connectors are mated at an angle, unmate the connectors and repeat the mating procedure from Step 1.



Nov.1.2026 Copyright 2026 HIROSE ELECTRIC CO., LTD. All Rights Reserved.

【Connector Un-Mating Precautions】

1. Remove the connector by pulling perpendicular to the mounting surface.
This is the recommended unmating method. However, for high-pin-count connectors or very thin FPCs, unmating in this direction may require additional care.

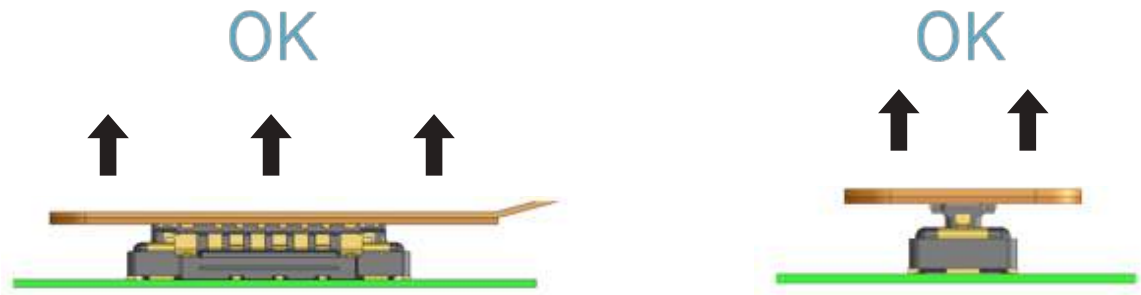

2. If perpendicular removal is difficult, unmate diagonally in the pitch direction.
Do not remove the connector in the width direction, as this may apply excessive stress to the contacts.

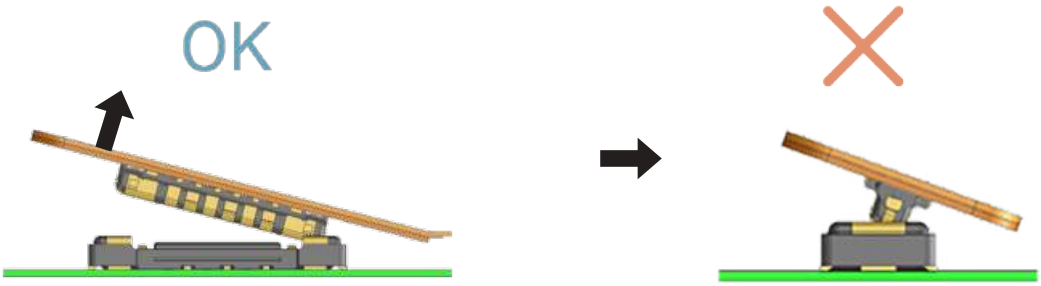

3. Ensure sufficient FPC rigidity before repeated unmating.
If the FPC is not rigid enough, repeated unmating may cause solder peeling or connector damage.
Verify the suitability of the FPC in advance, especially during early design or evaluation stages.
Do not remove the FPC by pulling from one corner or at an extreme angle, as this can place excessive stress on the contacts..

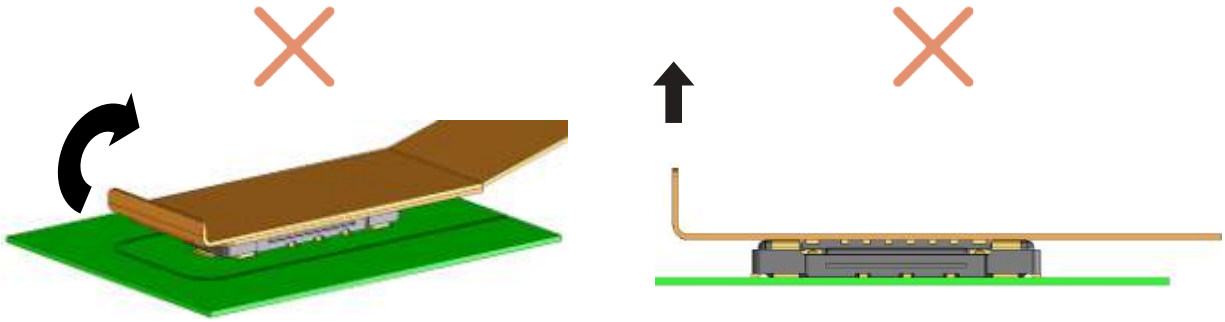

Nov.1.2026 Copyright 2026 HIROSE ELECTRIC CO., LTD. All Rights Reserved.

While Taking into Consideration

Specifications mentioned in this catalog are reference values.
When considering to order or use this product, please review the Drawing and Product Specifications sheets.
Use an appropriate cable when using the connector in combination with cables.
If considering usage of a non-specified cable, please contact your sales representative.
If assembly process is done by jigs & tools which are not identified by Hirose, the warranty of the product may be affected.
If considering usage for below mentioned applications, please contact your sales representative.
In cases where the application will demand a high level of reliability, such as automotive, medical instruments, public infrastructure, aerospace/ defense etc. Hirose must review before assurance of reliability can be given.

Nov.1.2026 Copyright 2026 HIROSE ELECTRIC CO., LTD. All Rights Reserved.

HIROSE ELECTRIC CO., LTD. 2-6-3,Nakagawa Chuoh,Tsuzuki-Ku,Yokohama-Shi 224-8540,JAPAN
https://www.hirose.com/

※ The contents of this catalog are current as of date of 04/2026. Contents are subject to change without notice for the purpose of improvements.
※ The HRS logo and "HIROSE" are trademarks of HIROSE ELECTRIC CO., LTD.