Feb.1.2026 Copyright 2026 HIROSE ELECTRIC CO., LTD. All Rights Reserved.
In case of consideration for using Automotive equipment / device which demand high reliability, kindly contact our sales window correspondents.

	COUNT	DESCRIPTION OF REVISIONS	BY	CHKD	DATE		COUNT	DESCRIPTION OF REVISIONS	BY	CHKD	DATE
△					. .	△					. .
△					. .	△					. .
△					. .	△					. .

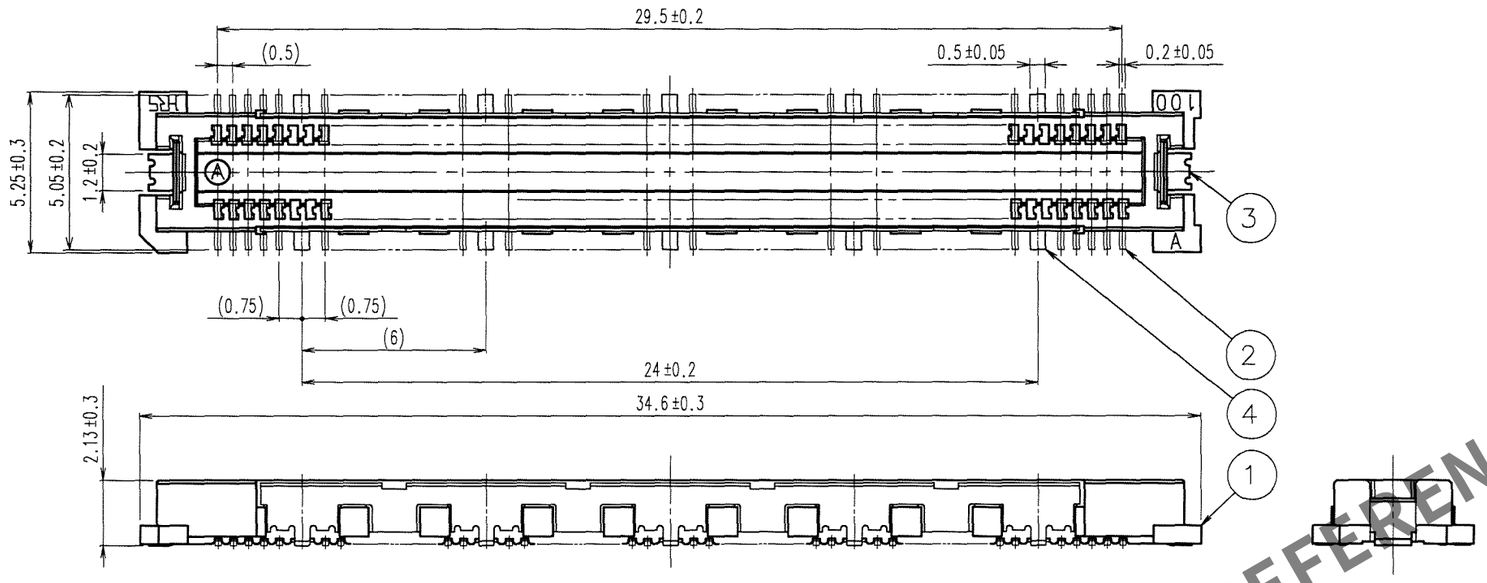

SIGNAL PORTION CROSS SECTION (10:1)

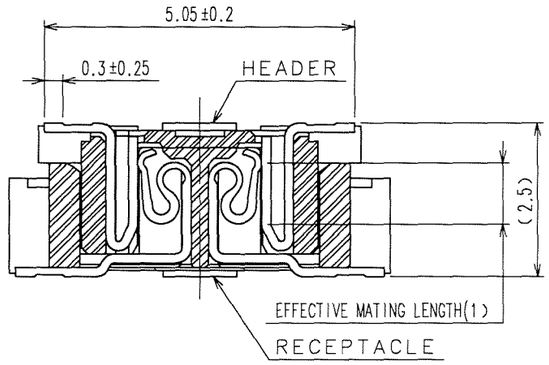

RECOMMENDED LAND PATTERN DIMENSION OF PCB

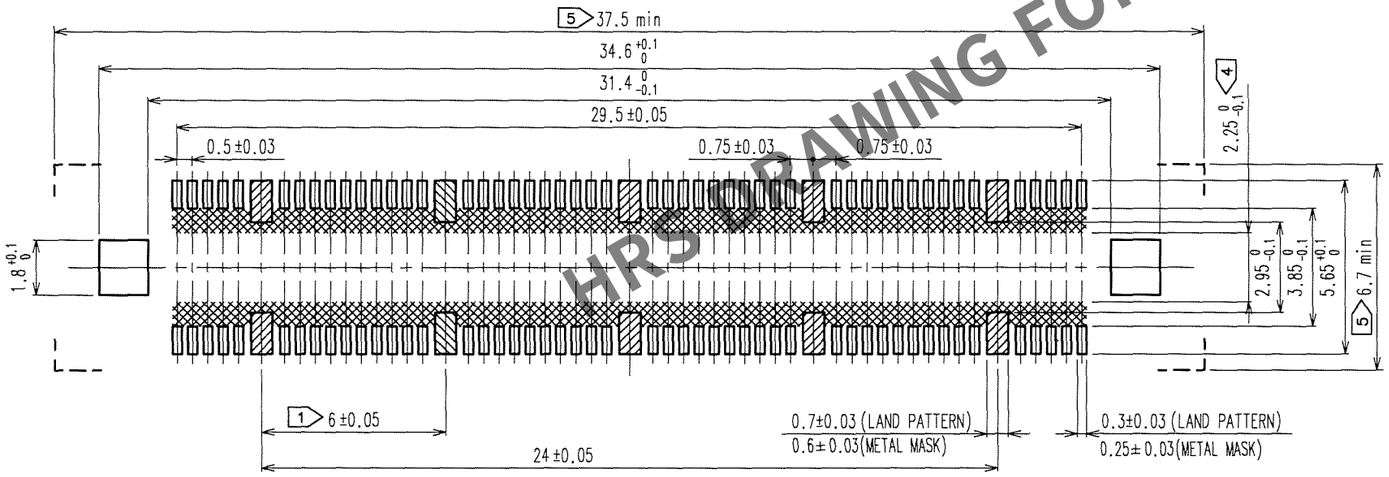

GROUND PORTION CROSS SECTION (10:1)

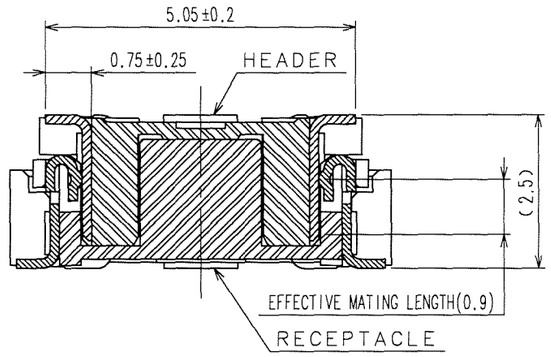

HRS DRAWING FOR REFERENCE

NOTES
1. 10 HATCHED ▨ PARTS:GROUND CIRUIT.
2. SMT LEAD-COPLANARITY:0.1 MAX.
3. THIS PRODUCT HAS NO POLARITY TO PATTERN FOR MOUNTING.
4. MAKE SURE WIDTH OF PATTERN IS WITHIN THAT OF LAND ,OR LEAD MAY TOUCH PATTERN.(THIS APPLIES TO HATCHED ▩ AREA.)
5. DO NOT MOUNT OTHER DEVICES ONTO [ ] AREA ,OR MATING PAIR CANNOT BE MATED.
6. THE DIMENSIONS IN PARENTHESES ARE FOR REFERENCE.

NO.	MATERIAL	FINISH, REMARKS	NO.	MATERIAL	FINISH, REMARKS
3, 4	PHOSPHOR BRONZE	TIN-PLATING	2	COPPER ALLOY	CONTACT AREA:GOLD 0.1 μm min.
1	LCP	BEIGE UL94V-0			LEAD AREA:GOLD FLASH
					UNDER PLATING:NICKEL 1 μm min.

CODE NO.(OLD)	DRAWN	DESIGNED	CHECKED	APPROVED	RELEASED
CL	S.KAMIGA 06.05.13	H.Nakamura 06.05.13	K.Ogawa '06.05.13	H.Okawa '06.05.13	

SCALE 5 : 1	DRAWING NO. EDC3-152603-25	PART NO. FX11B-100P/10-SV(71)
UNITS mm	HRS HIROSE ELECTRIC CO.,LTD.	CODE NO. CL573-0514-9-71 1/1

TO
PCK

FORM NO.229