KIT_PSC3M5_CC2 PSOC™ Control C3 Motor Control Evaluation Kit guide

About this document

Scope and purpose

This document describes the features and hardware details of the PSOC™ Control C3M5 motor control card, which is designed to serve as an evaluation platform for motor control applications with the PSOC™ Arm® Cortex®-M33 based microcontroller. This board is part of Infineon's motor control evaluation platform kits.

Intended audience

This document is intended for KIT_PSC3M5_CC2 users. This board is intended to be used under laboratory conditions.

Reference board/kit

Product(s) embedded on a PCB with a focus on specific applications and defined use cases that may include software. PCB and auxiliary circuits are optimized for the requirements of the target application.

***Note**: Boards do not necessarily meet safety, EMI, quality standards (for example UL, CE) requirements.*

Important notice

“Evaluation Boards and Reference Boards” shall mean products embedded on a printed circuit board (PCB) for demonstration and/or evaluation purposes, which include, without limitation, demonstration, reference and evaluation boards, kits and design (collectively referred to as “Reference Board”).

Environmental conditions have been considered in the design of the Evaluation Boards and Reference Boards provided by Infineon Technologies. The design of the Evaluation Boards and Reference Boards has been tested by Infineon Technologies only as described in this document. The design is not qualified in terms of safety requirements, manufacturing and operation over the entire operating temperature range or lifetime.

The Evaluation Boards and Reference Boards provided by Infineon Technologies are subject to functional testing only under typical load conditions. Evaluation Boards and Reference Boards are not subject to the same procedures as regular products regarding returned material analysis (RMA), process change notification (PCN) and product discontinuation (PD).

Evaluation Boards and Reference Boards are not commercialized products, and are solely intended for evaluation and testing purposes. In particular, they shall not be used for reliability testing or production. The Evaluation Boards and Reference Boards may therefore not comply with CE or similar standards (including but not limited to the EMC Directive 2004/EC/108 and the EMC Act) and may not fulfill other requirements of the country in which they are operated by the customer. The customer shall ensure that all Evaluation Boards and Reference Boards will be handled in a way which is compliant with the relevant requirements and standards of the country in which they are operated.

The Evaluation Boards and Reference Boards as well as the information provided in this document are addressed only to qualified and skilled technical staff, for laboratory usage, and shall be used and managed according to the terms and conditions set forth in this document and in other related documentation supplied with the respective Evaluation Board or Reference Board.

It is the responsibility of the customer’s technical departments to evaluate the suitability of the Evaluation Boards and Reference Boards for the intended application, and to evaluate the completeness and correctness of the information provided in this document with respect to such application.

The customer is obliged to ensure that the use of the Evaluation Boards and Reference Boards does not cause any harm to persons or third party property.

The Evaluation Boards and Reference Boards and any information in this document is provided "as is" and Infineon Technologies disclaims any warranties, express or implied, including but not limited to warranties of non-infringement of third party rights and implied warranties of fitness for any purpose, or for merchantability.

Infineon Technologies shall not be responsible for any damages resulting from the use of the Evaluation Boards and Reference Boards and/or from any information provided in this document. The customer is obliged to defend, indemnify and hold Infineon Technologies harmless from and against any claims or damages arising out of or resulting from any use thereof.

Infineon Technologies reserves the right to modify this document and/or any information provided herein at any time without further notice.

Safety precautions

Table 1	Safety precautions
	**Caution:** *The heat sink and device surfaces of the evaluation or reference board may become hot during testing. Hence, necessary precautions are required while handling the board. Failure to comply may cause injury.*
	**Caution:** *Only personnel familiar with the drive, power electronics and associated machinery should plan, install, commission and subsequently service the system. Failure to comply may result in personal injury and/or equipment damage.*
	**Caution:** *The evaluation or reference board contains parts and assemblies sensitive to electrostatic discharge (ESD). Electrostatic control precautions are required when installing, testing, servicing or repairing the assembly. Component damage may result if ESD control procedures are not followed. If you are not familiar with electrostatic control procedures, refer to the applicable ESD protection handbooks and guidelines.*
	**Caution:** *A drive that is incorrectly applied or installed can lead to component damage or reduction in product lifetime. Wiring or application errors such as undersizing the motor, supplying an incorrect or inadequate AC supply, or excessive ambient temperatures may result in system malfunction.*
	**Caution:** *The evaluation or reference board is shipped with packing materials that need to be removed prior to installation. Failure to remove all packing materials that are unnecessary for system installation may result in overheating or abnormal operating conditions.*

Table of contents

About this document . . . 1
Important notice . . . 2
Safety precautions . . . 3
Table of contents . . . 4
1 Introduction . . . 5
1.1 Kit contents . . . 5
1.2 Getting started . . . 5
1.3 Key features . . . 5
2 Kit operation . . . 7
2.1 Using the OOB example . . . 11
2.2 Creating a project and programming/debugging using ModusToolbox™ . . . 12
3 Hardware . . . 16
3.1 Hardware functional description . . . 16
3.2 PSOC™ Control C3M5 motor control card . . . 16
3.3 PSOC™ Control C3M5 MCU . . . 16
3.4 PSOC™ Control C3M5 MCU power supply system . . . 17
3.5 PSOC™ Control C3M5 MCU I/O connectors . . . 19
3.6 100-pin HD connector interface . . . 22
3.7 ADC input buffers . . . 25
3.8 Reset and user buttons . . . 26
3.9 Potentiometers and user LEDs . . . 26
3.10 Digital isolators and CAN interface . . . 27
3.11 PSOC™ Control C3M5 MCU clock architecture . . . 28
3.12 PSOC™ Control C3M5 MCU external programming or debugging headers . . . 29
3.13 XMC4200 as an onboard programmer/debugger . . . 30
3.14 Hall sensor and encoder interface . . . 31
3.15 Driver adapter card . . . 33
3.15.1 Drive adapter card (Pre-January 2026 version) . . . 33
3.15.2 Drive Adapter Card V2 (Post-January 2026 Version) . . . 39
4 Production data . . . 43
Revision history . . . 44
Trademarks . . . 45
Disclaimer . . . 46

1 Introduction

1.1 Kit contents

The kit comprises the following contents:

- KIT_PSC3M5_CC2 motor control card
- Drive adapter card
- USB Type-A to USB Type-C cable
- Quick start guide

1.2 Getting started

This guide is designed to familiarize you with the evaluation kit.

- The Kit operation section describes the major features and functionalities, such as programming, debugging, and USB-UART bridges of the PSOC™ Control C3M5 motor control card
- The Hardware section provides a detailed hardware description
- Application development using the PSOC™ Control C3M5 motor control card is supported in ModusToolbox™. ModusToolbox™ is a free development ecosystem that includes the Eclipse IDE for ModusToolbox™ and the PSOC™ Control C3M5 SDK along with PSOC™ Control C3M5 MCU. Using ModusToolbox™, you can enable and configure device resources, middleware libraries, write C/assembly source codes, and program or debug the device. For more information, see the ModusToolbox™ software installation guide
- Code examples are available for evaluating the PSOC™ Control C3M5 motor control card. These examples help you familiarize yourself with the PSOC™ Control C3M5 MCU and create your own designs. These examples can be accessed through the ModusToolbox™ Project Creator tool. Additionally, see Infineon code examples for ModusToolbox™ software to access these examples

1.3 Key features

The PSOC™ Control C3M5 motor control card is equipped with the following features:

- Infineon PSOC™ Control C3M5 (Arm® Cortex®-M33 based) microcontroller **PSC3M5FDS2AFQ1**, 180 MHz, up to 256 KB flash/64 KB SRAM, E-LQFP-80
- Connection to MADK boards (M1/M3/M5) via 100-pin HD connector connected to the XMC™ drive adapter card
- **Five LEDs**:
  - 1 Power LED
  - 2 User LEDs: User-controlled LED
  - 2 Debug LEDs and Aux LEDs: Debugger-controlled LEDs
- **Isolated debug options (default)**:
  - Onboard isolated debugger (SEGGER J-Link Lite) via USB connector
- **Isolated connectivity**:
  - UART channel of on-board debugger (SEGGER J-Link Lite) via USB connector
  - CAN interface on a 4-pin header X14

- **2 non-isolated debug options**:
  - SWD/JTAG 10-pin 1.27 mm header
  - ETM 20-pin 1.27 mm header
- **Power supply**:
  - **PSOC™ Control C3M5 MCU**:
  -
    - Via 100-pin expansion board (5 V or 24 V) converted to 3.3 V
    - Via debug USB connector, 5 V isolated DC-DC converted to 3.3 V
  - **XMC4200 MCU in isolated debug domain**:
    - Via debug USB connector

2 Kit operation

The PSOC™ Control C3M5 motor control card is an evaluation board designed to assist engineers in developing PSOC™ Control C3-based motor control solutions in combination with suitable power stage evaluation boards featuring the MADK connector (M1/M3/M5). The board features an isolated onboard debugger for programming and debugging over a USB interface. Additionally, it features USB VCOM functionality using the same USB connection as the debugger.

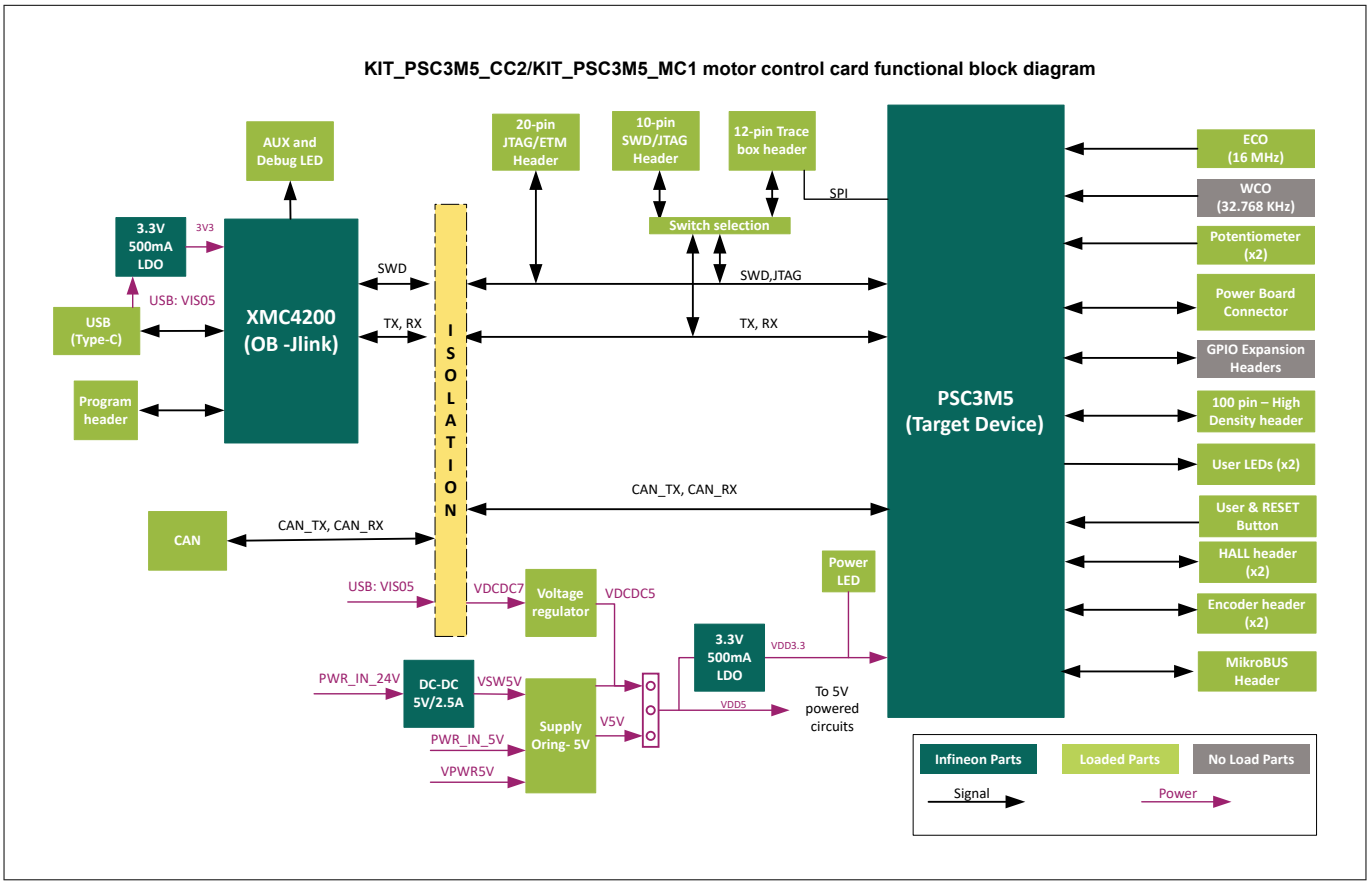

Figure 1 KIT_PSC3M5_CC2 motor control card block diagram

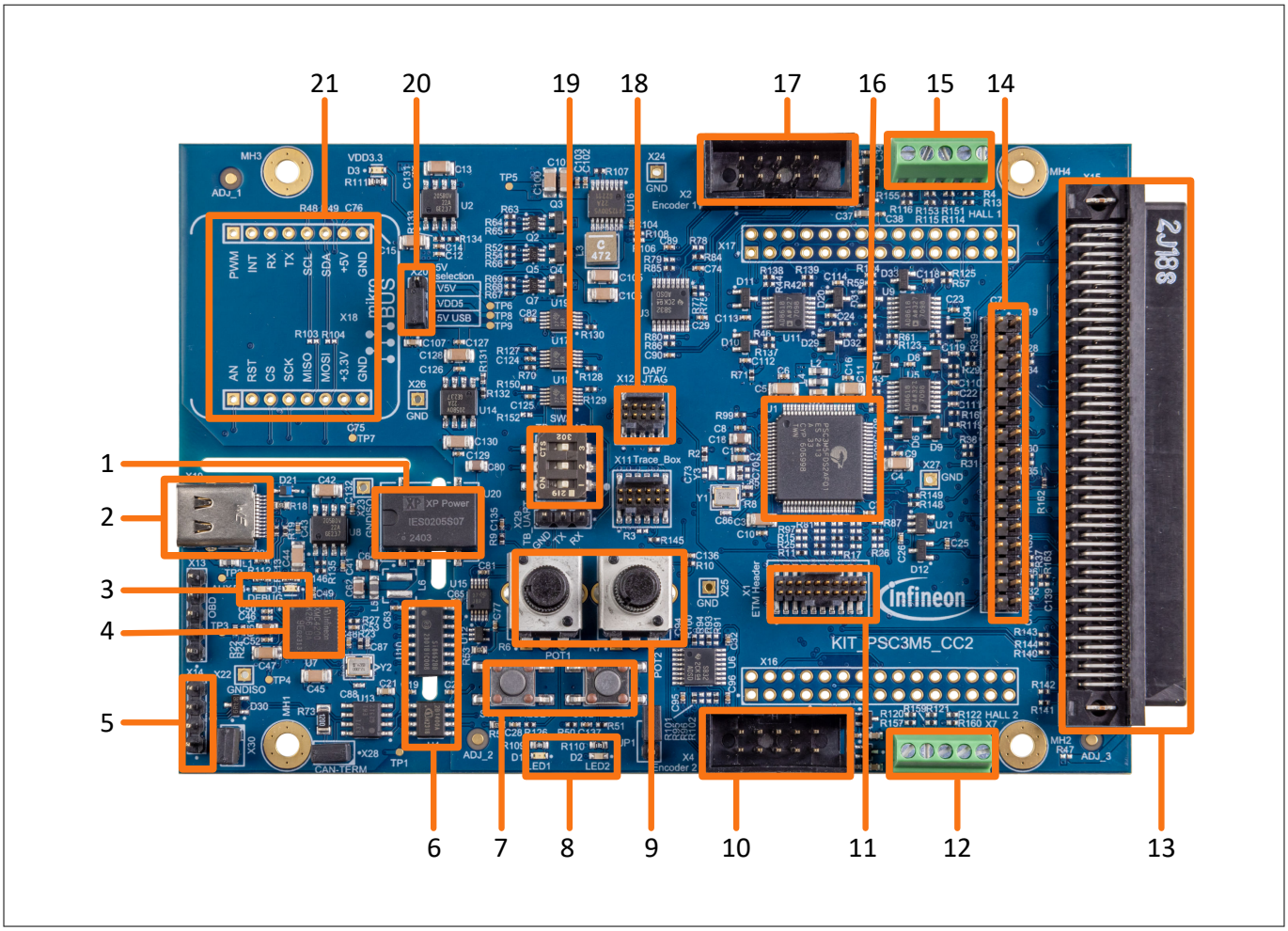

Figure 2 KIT_PSC3M5_CC2 motor control card details

1. Isolated DC-DC (U20)
2. USB Type-C socket (X10)
3. Debug LED (D5) and Aux LED (D4)
4. XMC4200 MCU(J-Link - U7)
5. Isolated CAN header (X14)
6. SWD/UART and CAN isolators (U10, U4)
7. User button (SW2) and Reset button (SW1)
8. User LED1 (D1) and User LED2 (D2)
9. Potentiometers (R6, R7)
10. Motor 2 encoder input (X4)
11. ETM header (X1)
12. Motor 2 Hall sensor input (X7)
13. 100-pin HD connector (X15)
14. MADK M5 pinout header (X19)
15. Motor 1 Hall sensor input (X3)
16. PSC3M5FDS2AFQ1 Target MCU (U1)
17. Motor 1 encoder input (X2)
18. 10-pin SWD/JTAG header (X12)
19. Debug interface selection (SW3)

20. Supply selection jumper (X20)
21. mikroBUS header (X18)

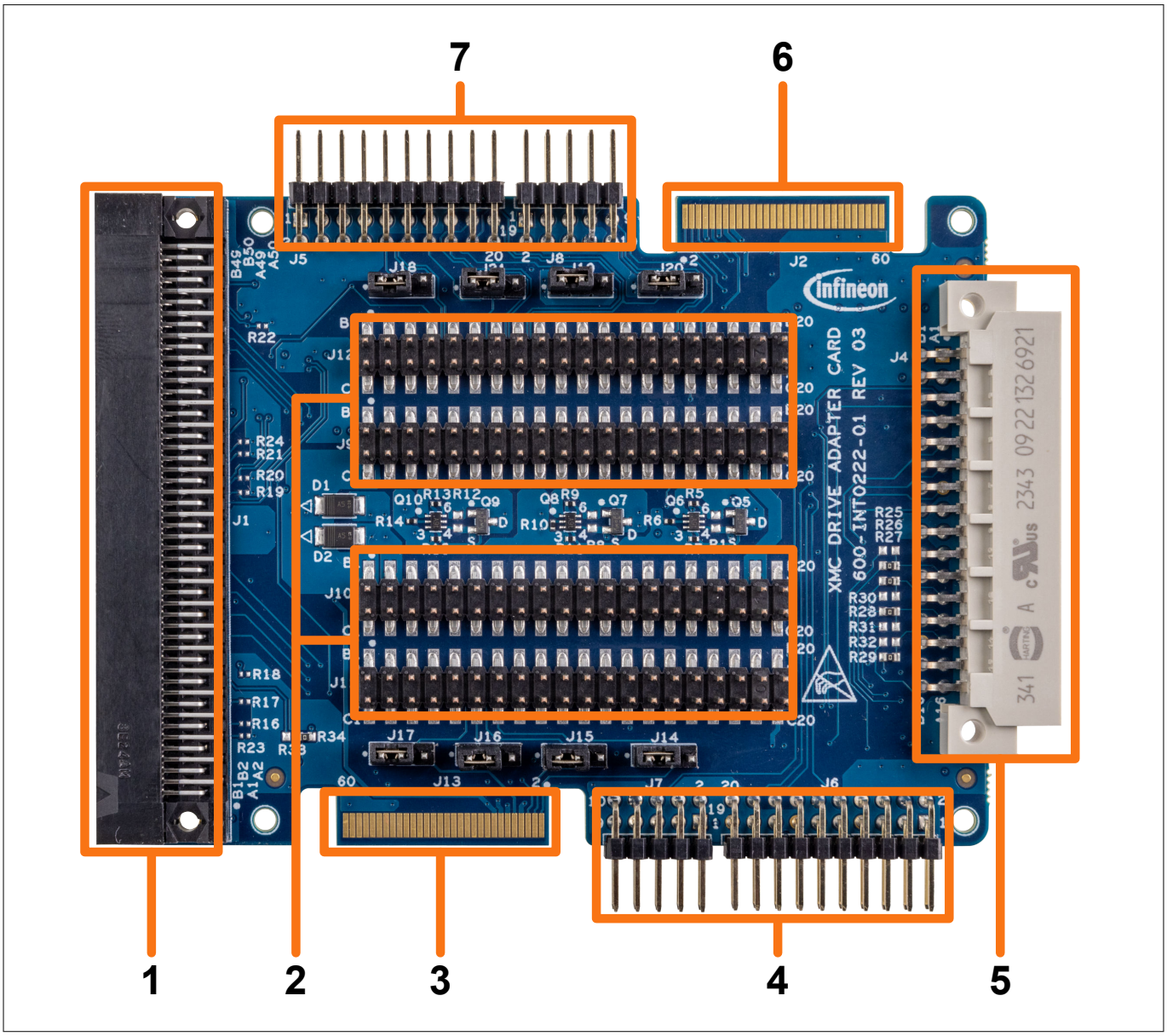

Figure 3 Drive adapter card details

1. 100-pin HD connector (J1)
2. 2x20 headers (J9, J10, J11, J12)
3. Samtec connector 2 (J13)
4. MADK M1 connector 2 (J6) and MADK M3 connector 2 (J6 + J7)
5. MADK M5 connector (J4)
6. Samtec connector 1 (J2)
7. MADK M1 connector 1 (J5) and MADK M3 connector 1 (J5 + J8)

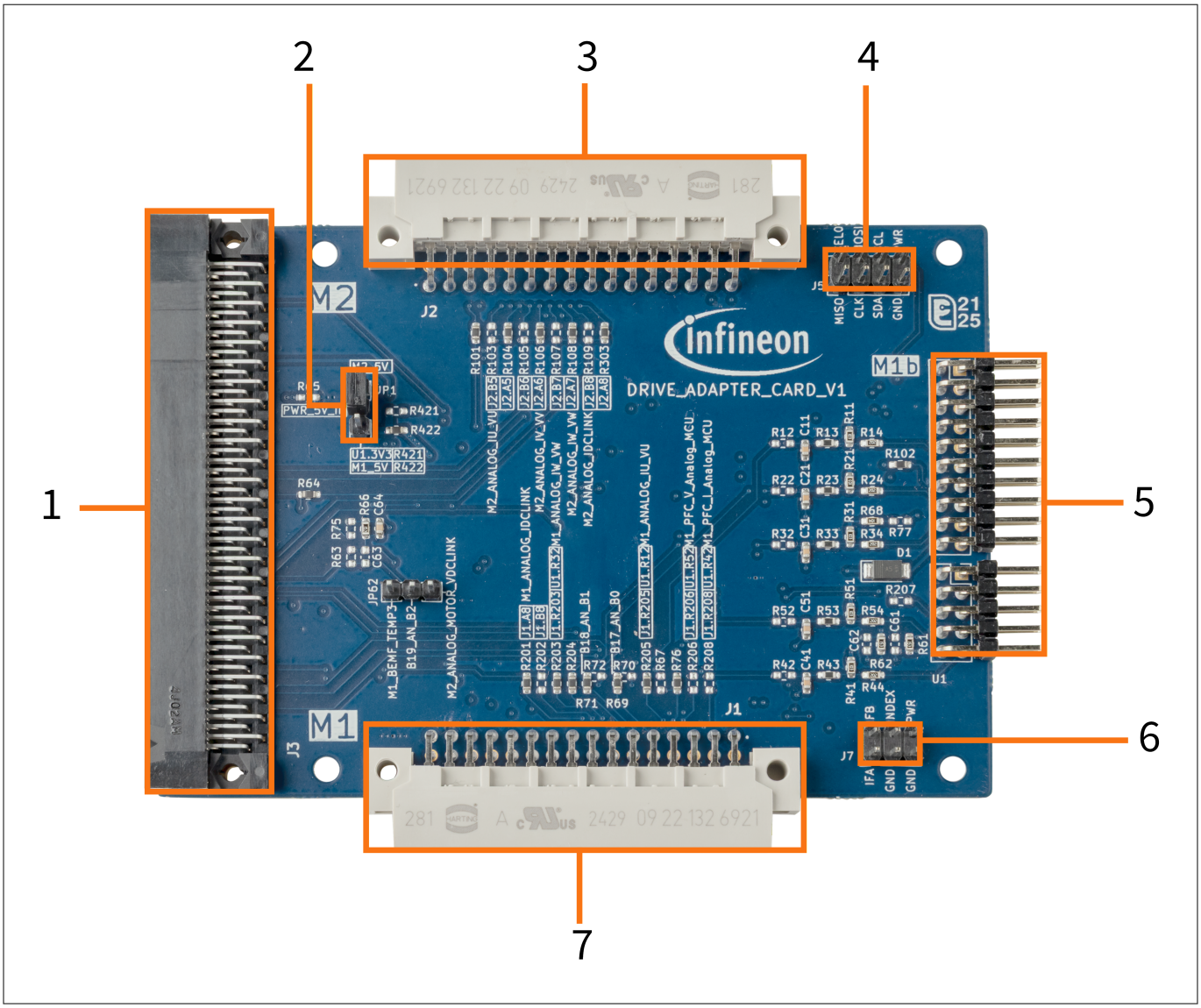

Figure 4 Driver adapter card_V2

1. 100-pin HD connector (J3)
2. Power supply jumper (J10)
3. MADK M5 connector (J2)
4. 2x4 Header (J6)
5. MADK M1 connector 1 (J5) and MADK M3 connector 1 (J4 + J5)
6. 2x3 Header (J7)
7. MADK M5 connector (J1)

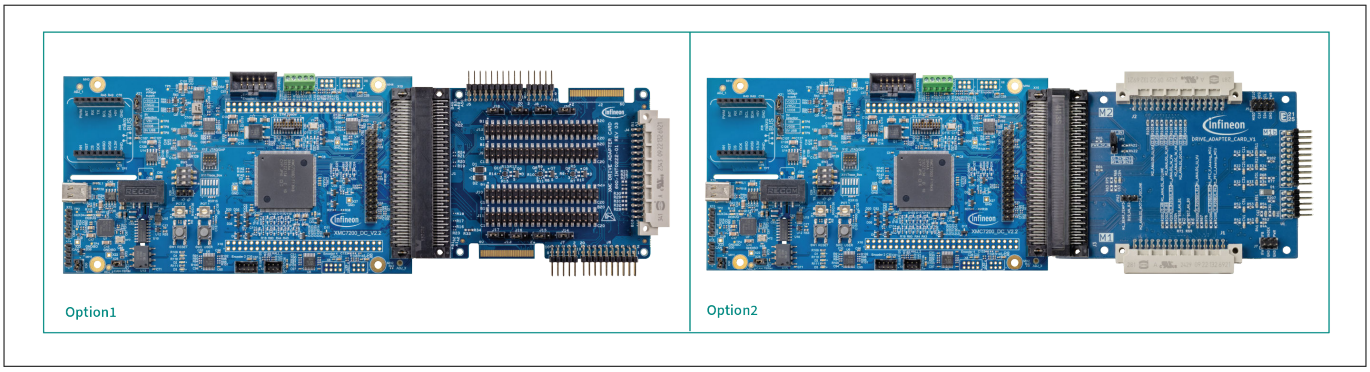

Figure 5 KIT_PSC3M5_CC2 motor control card connected to the drive adapter card

2.1 Using the OOB example

The PSOC™ Control C3M5 motor control card is, by default, programmed with the **Hello World** code example. For a detailed description of the project, see the example's `README.md` file in the GitHub repository. The `README.md` file is also available in the application directory once the application is created.

***Note**: At any point in time, if you overwrite the default application, you can restore it by programming the Hello World code example.*

To use the code example, do the following:

1. Connect the kit to the PC using the provided USB cable
2. Verify that the debug LED on the board is glowing
3. Open a terminal program such as Tera Term or Minicom and select the J-Link VCOM port. Set the serial port parameters to 8N1 and 115200 baud
4. Press the **XRES button (SW1)** on the board and confirm that the serial terminal application displays the bootup message as shown in Figure 6
5. Confirm that the user **LED1 (D1)** is blinking
6. Follow the instructions shown in the bootup message

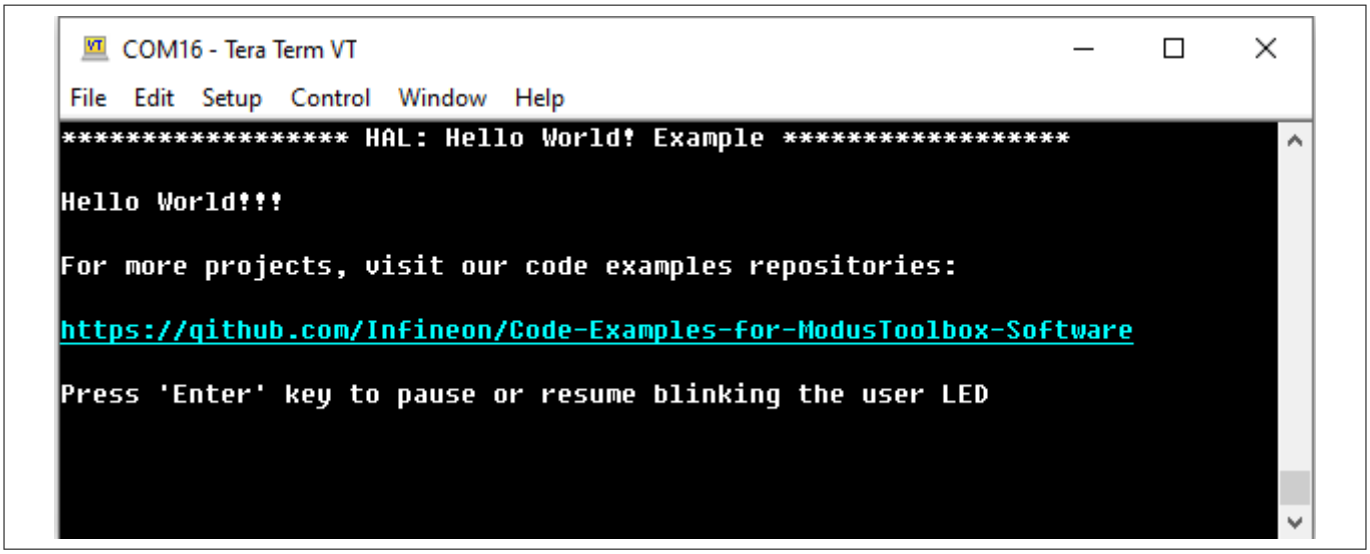

Figure 6 Serial terminal boot message

2.2 Creating a project and programming/debugging using ModusToolbox™

The PSOC™ Control C3M5 motor control card can be programmed and debugged using the onboard J-Link debugger. This onboard programmer/debugger supports a USB-UART bridge. An XMC4200 device is used to implement the J-Link functionality. See the J-Link user guide for more details.

The following steps briefly introduce project creation, programming, and debugging using ModusToolbox™. For detailed instructions, see **Help** > **ModusToolbox™ general documentation** > **ModusToolbox™ user guide.**

1. Connect the board to the PC using the provided USB cable through the J-Link USB connector (X10), as shown in Figure 7. It enumerates as a USB composite device if you are connecting it to your PC for the first time

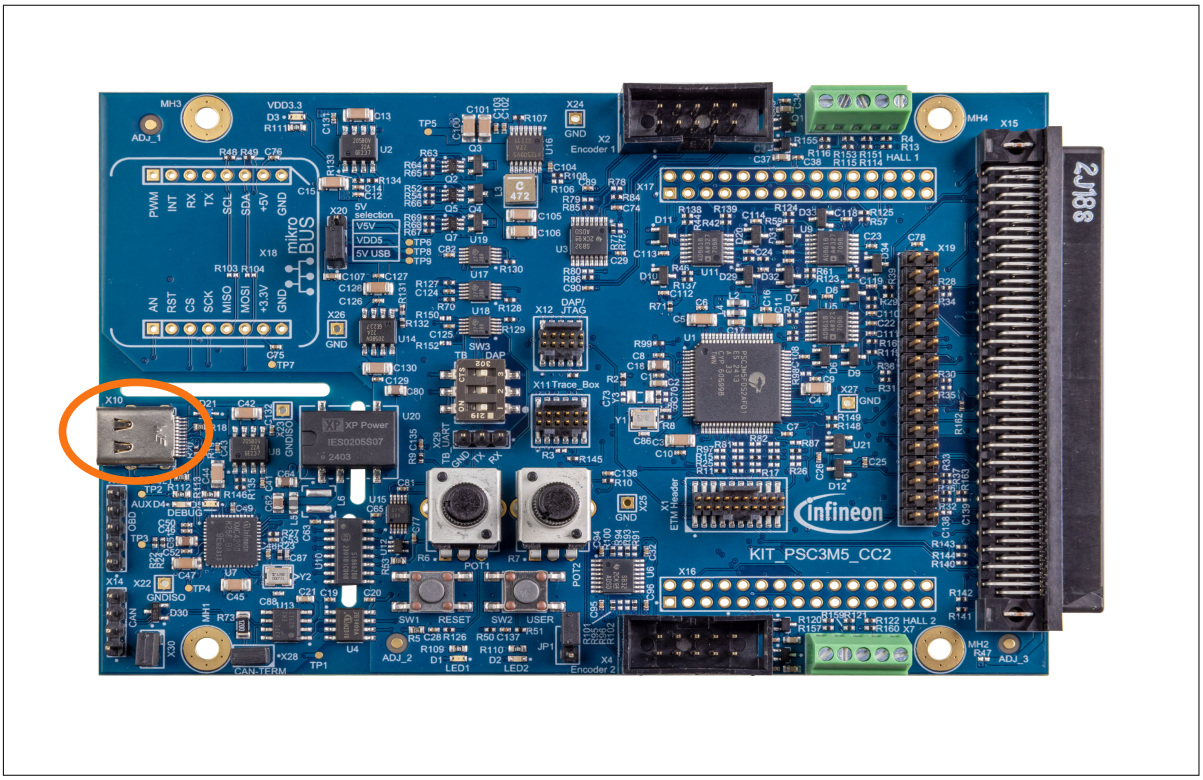

Figure 7 Connect USB cable to the USB connector on board

2. The debugger on this kit features the J-Link Lite with UART. The debug LED (green) is always ON if the USB is connected

***Note**: The programming can be done either with the onboard J-Link debugger (isolated) or by attaching an external debugger to the connector X12 (non-isolated) on the board. It is recommended to use the onboard J-Link debugger*

3. In the Eclipse IDE for ModusToolbox™, import the desired code example (application) into a new workspace

a. Click on **New Application** from the Quick Panel tab

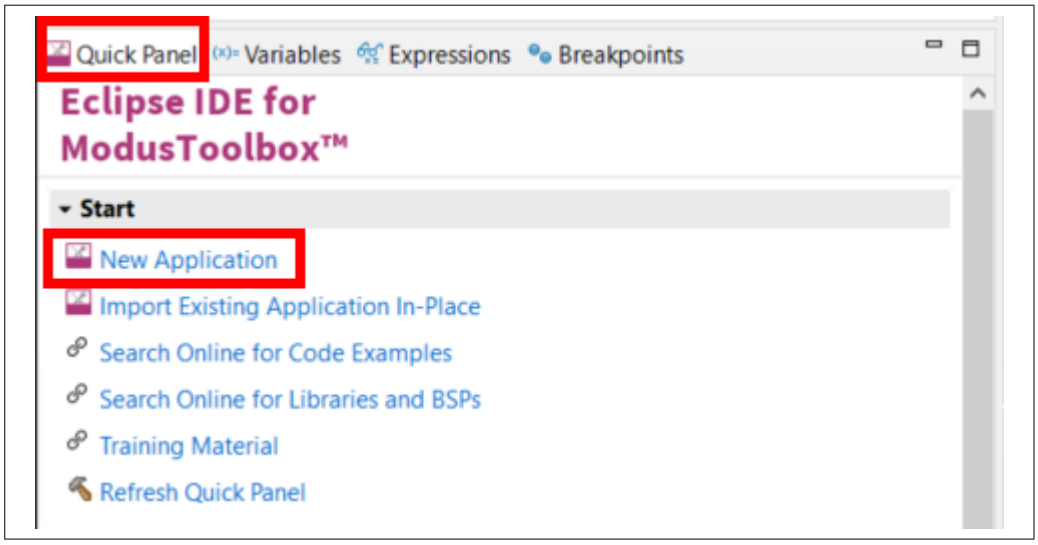

Figure 8 Create new application

b. In the Choose Board Support Package (BSP) window, expand the PSOC™ Control BSPs, select the **KIT_PSC3M5_CC2** BSP, and click **Next**

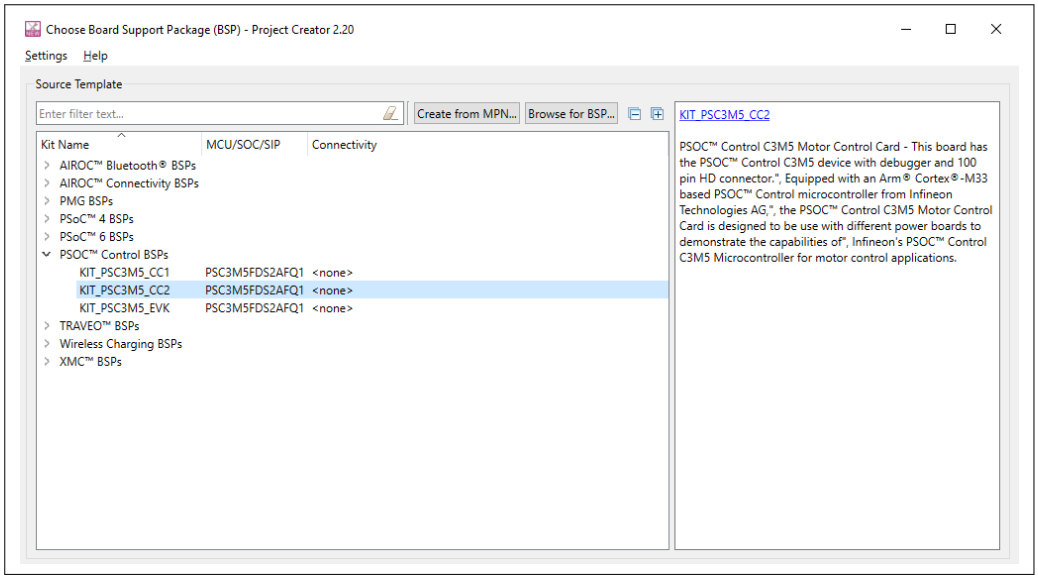

Figure 9 Choose Board Support Package

c. In the Select Application window, expand the Getting Started section, select the **Hello World** application, and click **Create**

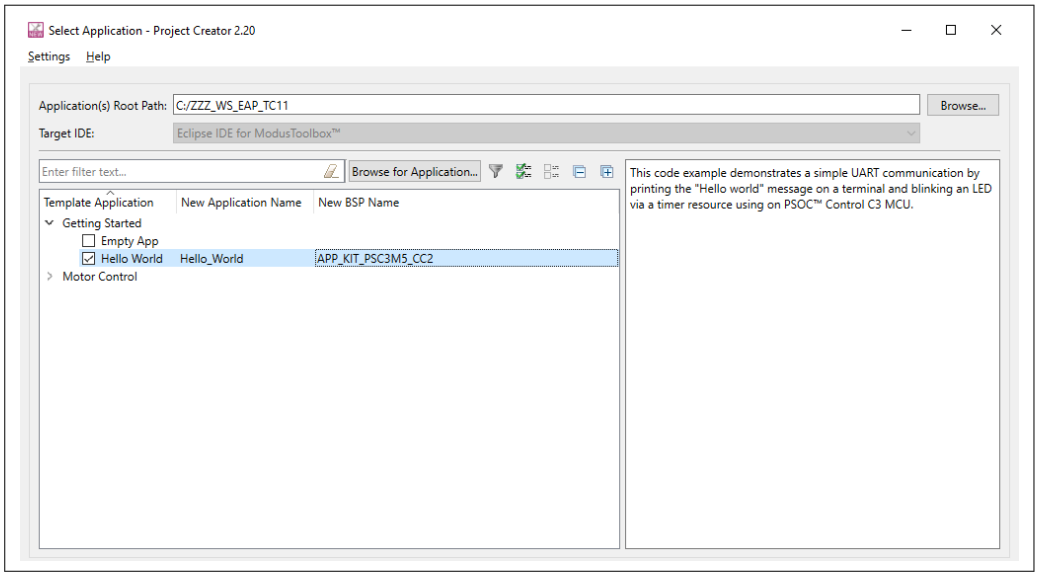

Figure 10 Select application

4. To build and program the PSOC™ Control C3M5 MCU application, do the following:
   a. In the Project Explorer, select the **<App_Name>** project
   b. In the Quick Panel tab, scroll to the **Launches**
   c. Click the **<App_Name> Program (J-Link)** configuration

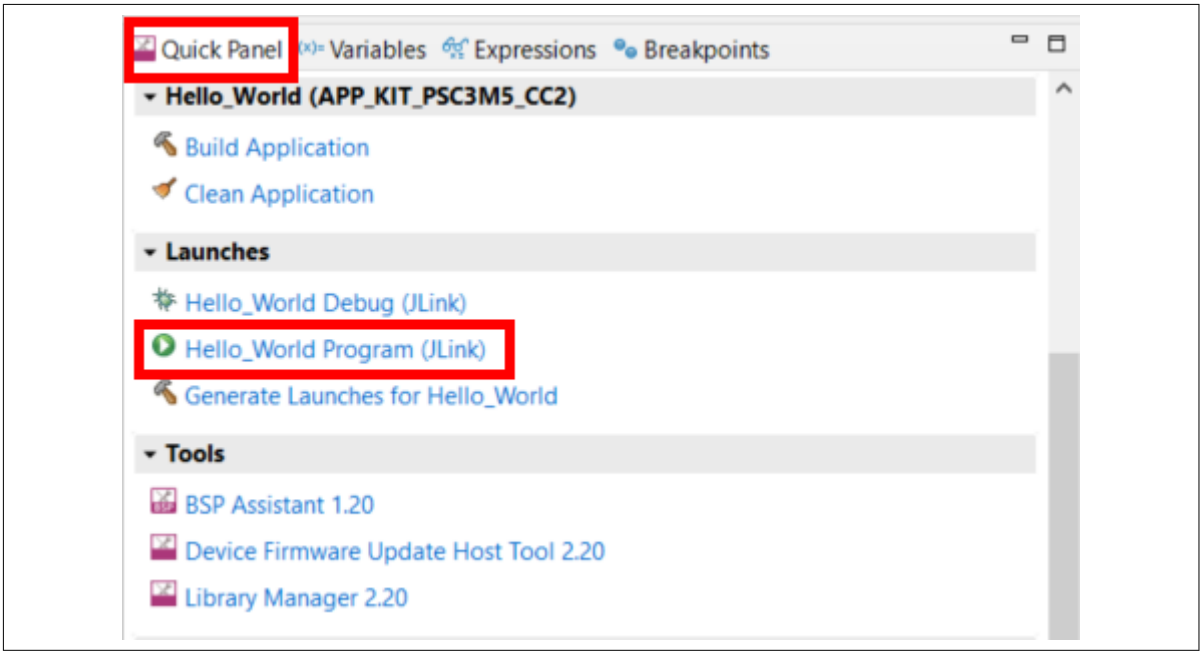

Figure 11 Programming in ModusToolbox™

5. ModusToolbox™ software has an integrated debugger. To debug a PSOC™ Control C3M5 MCU application:
   a. In the Project Explorer, select the **<App_Name>** project
   b. In the Quick Panel, scroll to the Launches section and click the **<App_Name> Debug (J-Link)** configuration. For more information, see the Program and debug section in the Eclipse IDE for ModusToolbox™ user guide

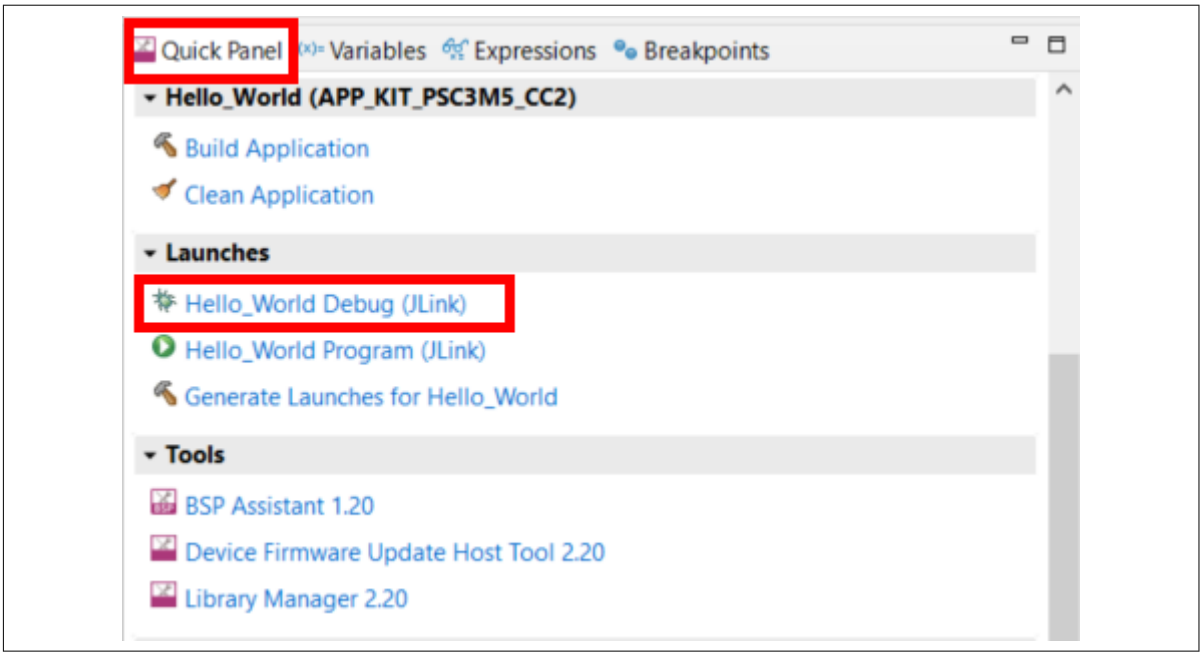

Figure 12 Debugging in ModusToolbox™

3 Hardware

3.1 Hardware functional description

This section provides a detailed explanation of the individual hardware blocks used in this kit.

3.2 PSOC™ Control C3M5 motor control card

The control card is designed for the PSOC™ Control C3M5 microcontroller in an E-LQFP-80 package. The onboard isolated J-Link debugger is implemented using the XMC4200 microcontroller. All the I/Os from the PSOC™ Control C3M5 MCU are routed out to the 100-pin high-density (HD) connector, which can be inserted into a mating connector on the included adapter board. The adapter board, in turn, provides connectivity to the motor control power boards using MADK M1/M3, M5, and Samtec connectors.

3.3 PSOC™ Control C3M5 MCU

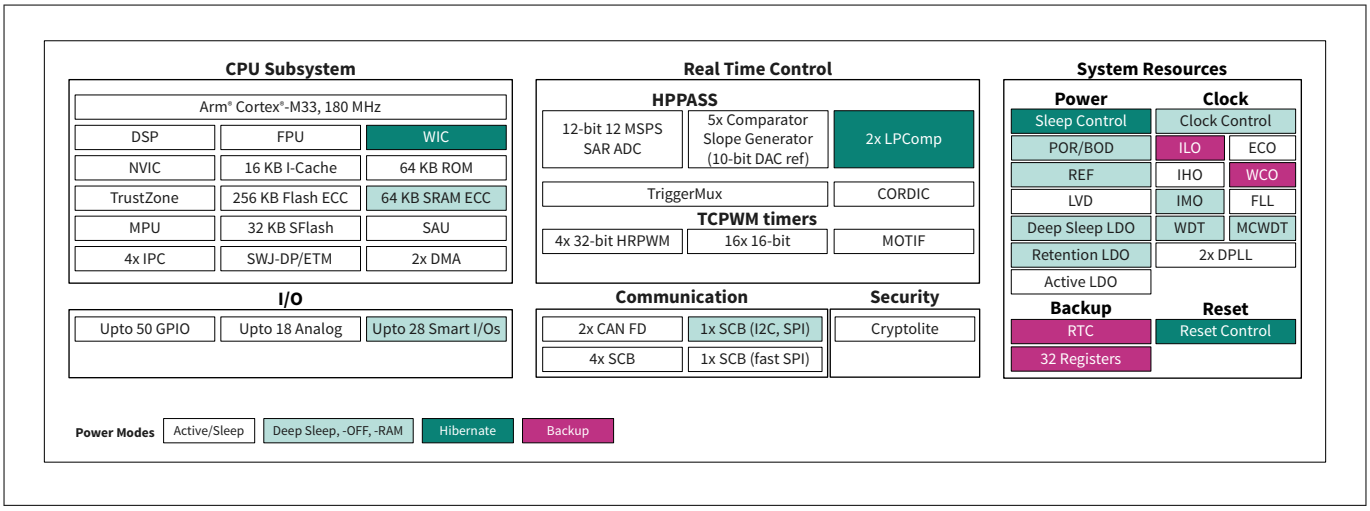

Figure 13 PSOC™ Control C3M5 MCU block diagram

The PSC3M5xD devices are based on the Arm® Cortex®-M33 microcontroller, running at up to 180 MHz with DSP and FPU capabilities. In addition to the CPU subsystem, the devices contain advanced real-time control peripherals, such as a high-performance programmable analog subsystem, comparators, advanced timers with high-resolution capability, up to six serial communication blocks (SCBs), and two CAN FDs for communication. The devices support one Active mode and five low-power modes for managing and reducing power consumption depending on application requirements.

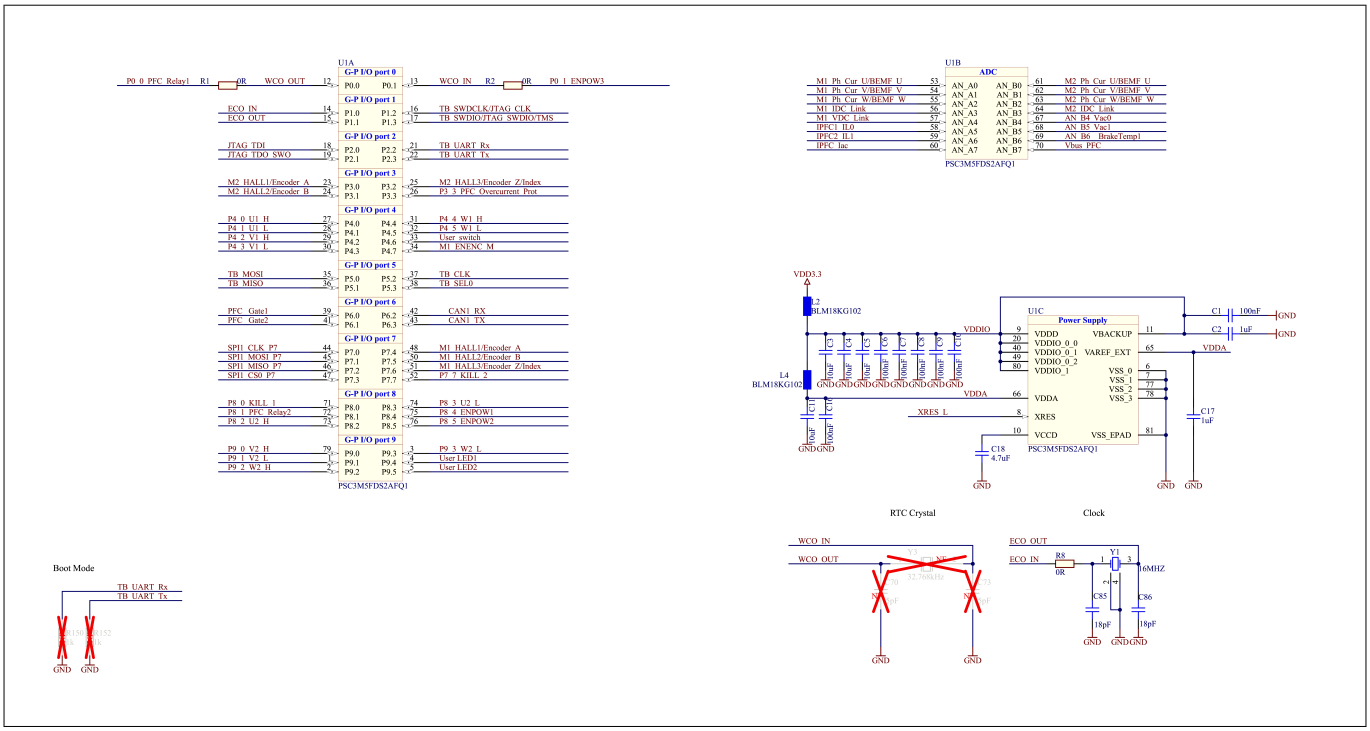

Figure 14 PSOC™ Control C3 MCU pin connections

3.4 PSOC™ Control C3M5 MCU power supply system

The PSOC™ C3M5 MCU operates using a single regulated VDDD supply within the range of 1.71 V to 3.6 V. Additionally, there is an optional VBACKUP supply, which has a range of 1.4 V to 3.6 V. A linear regulator powers the core logic at four voltage levels: 0.9 V, 1.0 V, 1.1 V, and 1.2 V. Voltage level switching is implemented by writing to the power control registers. The voltage for the core logic can be set based on the application's performance and power requirements.

Typically, the backup domain requires an input voltage of 1.4 V to 3.6 V, which can be provided by connecting a backup battery or a supercapacitor to the VBACKUP pin. The internal backup switch automatically selects between VDDD and VBACKUP (when VDDD is no longer available) for powering the backup domain peripherals like the RTC, WCO, ILO, and backup registers. Some I/O cells are powered from the VBACKUP supply before the internal backup switch. If the application does not require a dedicated backup source, VBACKUP can be connected to VDDD externally to ensure that the I/O cells powered by VBACKUP are functional.

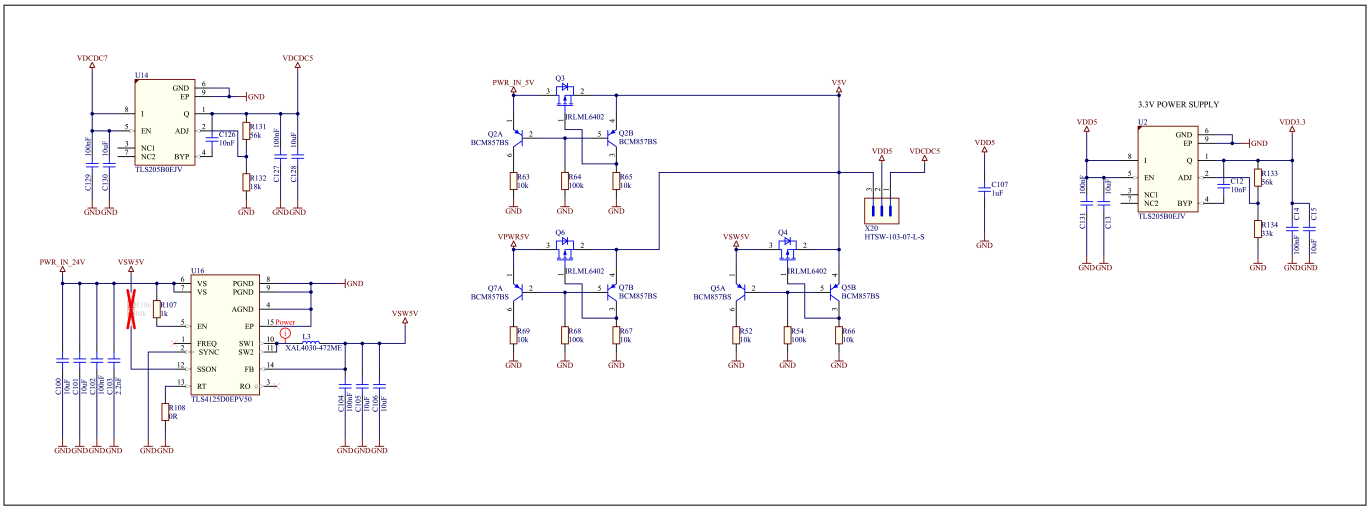

Figure 15 PSOC™ Control C3 MCU power supply scheme

The PSOC™ Control C3 MCU operates at 3.3 V, while the rest of the board requires both 3.3 V and 5 V supplies. The VDD3.3, used to power the MCU, is generated using the U2 low-dropout regulator. The VDD5 rail, which powers this regulator as well as the rest of the circuits running on 3 V or 5 V, can be sourced from any of the following options:

1. **Isolated USB supply**: The USB 5 V supply is used to power a 5 V to 7 V DC-DC isolated converter, which in turn generates a 5 V supply, VDCDC5, using U14. This supply can be used to power the board when the X20 jumper is set to the 1-2 position
2. **5 V or 24 V supply from the power board**: When the X20 jumper is set to the 2-3 position, the board can be powered by any of the following sources:
   a. **High-density HD connector (X15)**: Either a 24 V supply on pin B41, converted to 5 V using U16, or a 5 V supply on pins B5/B10 of the 100-pin high-density connector
   b. **MADK5 power board header (X19)**: A 5 V supply on pin 2 of the X19 header can be used to power the board

Multiple 5 V sources, which come from the power stage (either direct 5 V or 24 V regulated to 5 V), are ORed using low-drop rectifiers based on the Q3, Q4, and Q6 MOSFETs.

3.5 PSOC™ Control C3M5 MCU I/O connectors

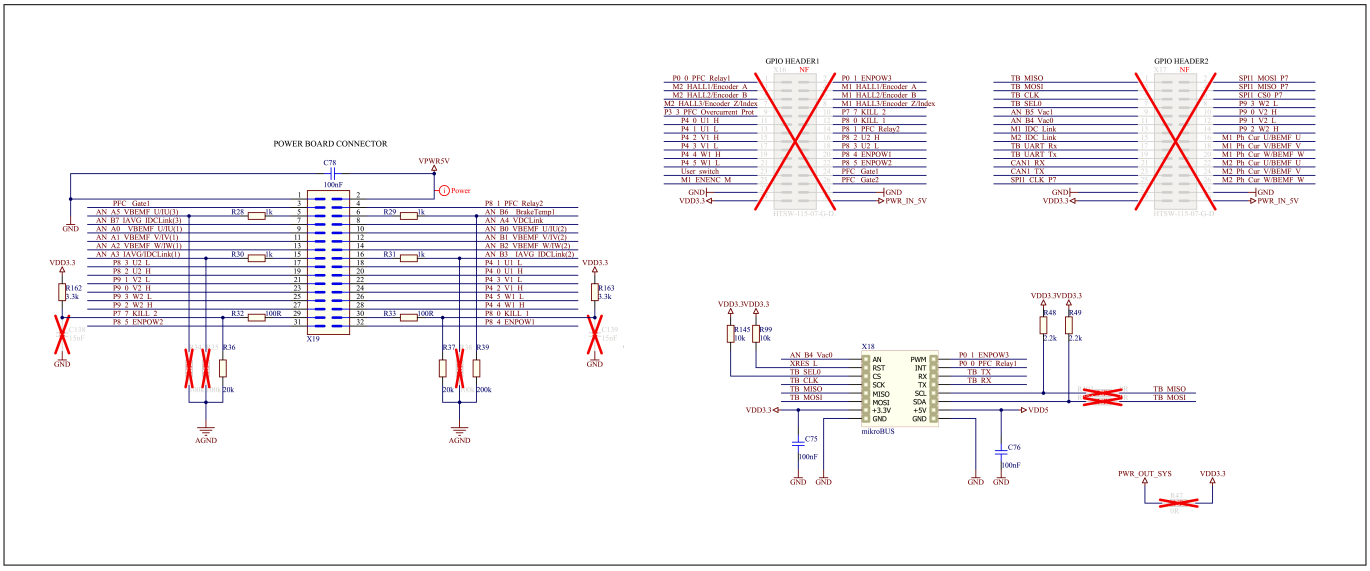

Figure 16 MADK M5 header, expansion headers, and mikroBUS header

MADK M5 header (X19): The MADK M5 header provides the same pinout available in the MADK M5 connector on the drive adapter card, using a 16x2 male header with a standard 2.54 mm pitch. This header can be used for hardware debugging or probing signals.

Table 2 MADK M5 header pinout details

Pin no.	Signal name	PSC3M5 pin	Description
1	GND	GND	Ground
2	VPWR5V	NA	Power input
3	PFC_Gate1	P6.0	PFC gate PWM signal
4	P8_1_PFC_Relay2	P8.1	PFC relay GPIO output
5	AN_A5_VBEMF_U/IU(3)[1)]	AN_A5	PFC current sense signal (pin B45 of X15)
6	AN_B6_BrakeTemp1	AN_B6	Temperature feedback for motor 1 power stage
7	AN_B7_IAVG_IDCLink(3)[2)]	AN_B7	PFC bus voltage sensing (pin A46 on X15)
8	AN_A4_VDCLink	AN_A4	Power stage VDC link sense signal
9	AN_A0_VBEMF_U/IU(1)	AN_A0	Motor 1 BEMF U or Current U sense
10	AN_B0_VBEMF_U/IU(2)	AN_B0	Motor 2 BEMF U or Current U sense
11	AN_A1_VBEMF_V/IV(1)	AN_A1	Motor 1 BEMF V or Current V sense
12	AN_B1_VBEMF_V/IV(2)	AN_B1	Motor 2 BEMF V or Current V sense

(table continues...)

Table 2 (continued) MADK M5 header pinout details

Pin no.	Signal name	PSC3M5 pin	Description
13	AN_A2_VBEMF_W/IW(1)	AN_A2	Motor 1 BEMF W or Current W sense
14	AN_B2_VBEMF_W/IW(2)	AN_B2	Motor 2 BEMF W or Current W sense
15	AN_A3_IAVG/IDCLink(1)	AN_A3	Motor 1 DC link shunt current
16	AN_B3_IAVG/IDCLink(2)	AN_B3	Motor 2 DC link shunt current
17	P8_3_U2_L	P8.3	Motor 2 PWM UL
18	P4_1_U1_L	P4.1	Motor 1 PWM UL
19	P8_2_U2_H	P8.2	Motor 2 PWM UH
20	P4_0_U1_H	P4.0	Motor 1 PWM UH
21	P9_1_V2_L	P9.1	Motor 2 PWM VL
22	P4_3_V1_L	P4.3	Motor 1 PWM VL
23	P9_0_V2_H	P9.0	Motor 2 PWM VH
24	P4_2_V1_H	P4.2	Motor 1 PWM VH
25	P9_3_W2_L	P9.3	Motor 2 PWM WL
26	P4_5_W1_L	P4.5	Motor 1 PWM WL
27	P9_2_W2_H	P9.2	Motor 2 PWM WH
28	P4_4_W1_H	P4.4	Motor 1 PWM WH
29	P7_7_KILL_2	P7.7	Motor 2 kill feedback
30	P8_0_KILL_1	P8.0	Motor 1 kill feedback
31	P8_5_ENPOW2	P8.5	Motor 2 power stage enables
32	P8_4_ENPOW1	P8.4	Motor 1 power stage enables

1) The AN_A5_VBEMF_U/IU(3) net is connected to pin B45 of the 100-pin high-density connector and is used for PFC current sensing (ANALOG_PFC_I1 signal).

2) The AN_B7_IAVG_IDCLink(3) net is connected to pin A46 of the 100-pin high-density connector and is used for PFC voltage sensing (ANALOG_PFC_VDCLINK signal).

mikroBUS header (X18): The mikroBUS header provides a standardized interface for connecting compatible Click boards, which can expand the kit's functionality with sensors, actuators, communication modules, and more. Note that some interfaces may require rework, as the same pins are used for multiple functionalities.

***Note**: Since SPI and I^2C use the same SCB pins, only one of these interfaces can be used at a time.*

Table 3 mikroBUS header pinout details

Pin	Signal name	Connected to signal	PSC3 MCU pin	Rework required
1	AN	Vac0/POT1	AN_B4	Y
2	RST	XRES_L	XRES	-
3	CS	SCB3 SPI CS	P5.3	-
4	SCK	SCB3 SPI SCK	P5.2	-
5	MISO	SCB3 SPI MISO	P5.1	-
6	MOSI	SCB3 SPI MOSI	P5.0	-
7	+3.3 V	VDD3.3	VDDD	-
8	GND	GND	EPAD	-
9	GND	GND	EPAD	-
10	+5 V	VDD5	-	-
11	SDA	SCB3 I2C SDA	P5.0	Y
12	SCL	SCB3 I2C SCL	P5.1	Y
13	TX	SCB1 UART RX	P2.2	-
14	RX	SCB1 UART TX	P2.3	-
15	INT	GPIO interrupt	P0.0	-
16	PWM	TCPWM line out	P0.1	-

***Note**: mikroBus header pin 1 AN input is also connected to POT1. Remove R9 to use this pin for an external analog input.*

3.6 100-pin HD connector interface

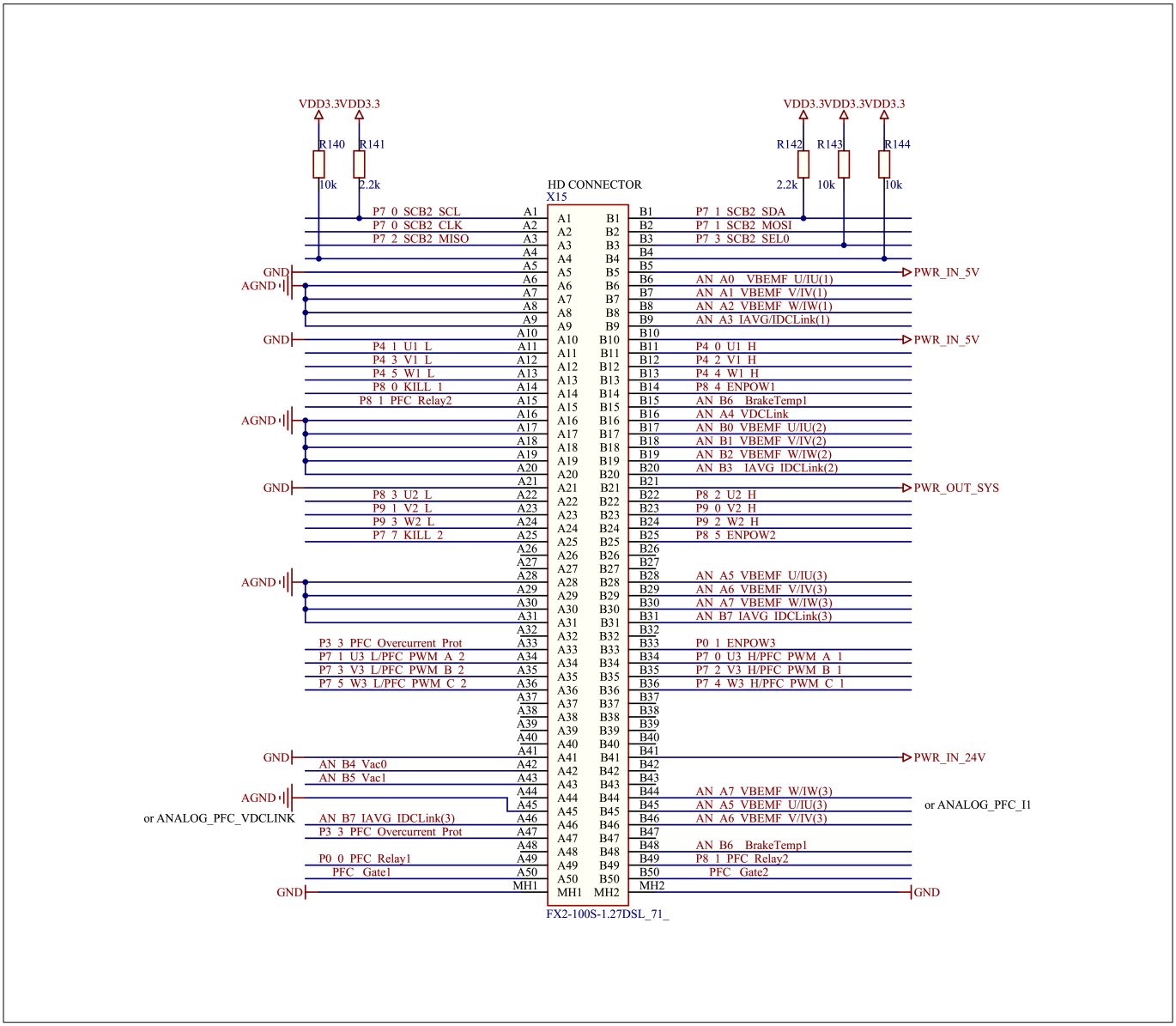

Figure 17 100-pin HD connector

The 100-pin HD connector interfaces with the drive adapter card, providing connectivity for MADK motor power stages. It supports single and dual motors, as well as optional power factor correction (PFC) control or a third motor.

Table 4 X15 HD connector peripheral details

X15 HD pin	PSC3 pin	Peripherals	X15 HD pin	PSC3 pin	Peripherals
A1	P7.0	SCB2 SCL	B1	P7.1	SCB2 SDA
A2	P7.0	SCB2 CLK	B2	P7.1	SCB2 MOSI
A3	P7.2	SCB2 MISO	B3	P7.3	SCB2 CS
A4	-	-	B4	-	-

(table continues...)

Table 4 (continued) X15 HD connector peripheral details

X15 HD pin	PSC3 pin	Peripherals	X15 HD pin	PSC3 pin	Peripherals
A5	GND	Ground	B5	PWR_IN_5V	5 V Input from power board
A6	AGND	Analog ground	B6	AN_A0	VBEMFU/IU(1)
A7	AGND	Analog ground	B7	AN_A1	VBEMFV/IV(1)
A8	AGND	Analog ground	B8	AN_A2	VBEMFW/IW(1)
A9	AGND	Analog ground	B9	AN_A3	IAVG/IDCLink(1)
A10	GND	Ground	B10	PWR_IN_5V	5 V Input from power board
A11	P4.1	U1L	B11	P4.0	U1H
A12	P4.3	V1L	B12	P4.2	V1H
A13	P4.5	W1L	B13	P4.4	W1H
A14	P8.0	KILL_1	B14	P8.4	ENPOW1
A15	P8.1	PFC_Relay2	B15	AN_B6	BrakeTemp1
A16	AGND	Analog ground	B16	AN_A4	VDCLink
A17	AGND	Analog ground	B17	AN_B0	VBEMFU/IU(2)
A18	AGND	Analog ground	B18	AN_B1	VBEMFV/IV(2)
A19	AGND	Analog ground	B19	AN_B2	VBEMFW/IW(2)
A20	AGND	Analog ground	B20	AN_B3	IAVG/IDCLink(2)
A21	GND	Ground	B21	PWR_OUT_SYS	3.3 V output from control board
A22	P8.3	U2L	B22	P8.2	U2H
A23	P9.1	V2L	B23	P9.0	V2H
A24	P9.3	W2L	B24	P9.2	W2H
A25	P7.7	KILL2	B25	P8.5	ENPOW2
A26	-	-	B26	-	-
A27	-	-	B27	-	-
A28	AGND	Analog ground	B28	AN_A5	VBEMFU/IU(3)
A29	AGND	Analog ground	B29	AN_A6	VBEMFV/IV(3)
A30	AGND	Analog ground	B30	AN_A7	VBEMFW/IW(3)
A31	AGND	Analog ground	B31	AN_B7	IAVG/IDCLink(3)
A32	-	-	B32	-	-
A33	P3.3	PFC_Overcurrent_Prot	B33	P0.1	ENPOW3

(table continues...)

Table 4 (continued) X15 HD connector peripheral details

X15 HD pin	PSC3 pin	Peripherals	X15 HD pin	PSC3 pin	Peripherals
A34	P7.1	U3L/ PFC_PWM_A_2	B34	P7.0	U3H/ PFC_PWM_A_1
A35	P7.3	V3L/ PFC_PWM_B_2	B35	P7.2	V3H/ PFC_PWM_B_1
A36	P7.5	W3L/ PFC_PWM_C_2	B36	P7.4	W3H/ PFC_PWM_C_1
A37	-	-	B37	-	-
A38	-	-	B38	-	-
A39	-	-	B39	-	-
A40	-	-	B40	-	-
A41	GND	Ground	B41	PWR_IN_24V	24 V supply input from power board
A42	AN_B4	Vac0	B42	-	-
A43	AN_B5	Vac1	B43	-	-
A44	-	-	B44	AN_A7	VBEMFW/IW(3)
A45	AGND	Analog ground	B45	AN_A5	VBEMFU/IU(3)
A46	AN_B7	IAVG_IDCLink(3)	B46	AN_A6	VBEMFV/IV(3)
A47	P3.3	PFC_Overcurrent_Prot	B47	-	-
A48	-	-	B48	AN_B6	BrakeTemp1
A49	P0.0	PFC_Relay1	B49	P8.1	PRC_Relay2
A50	P6.0	PFC_Gate1	B50	-	PFC_Gate2

3.7 ADC input buffers

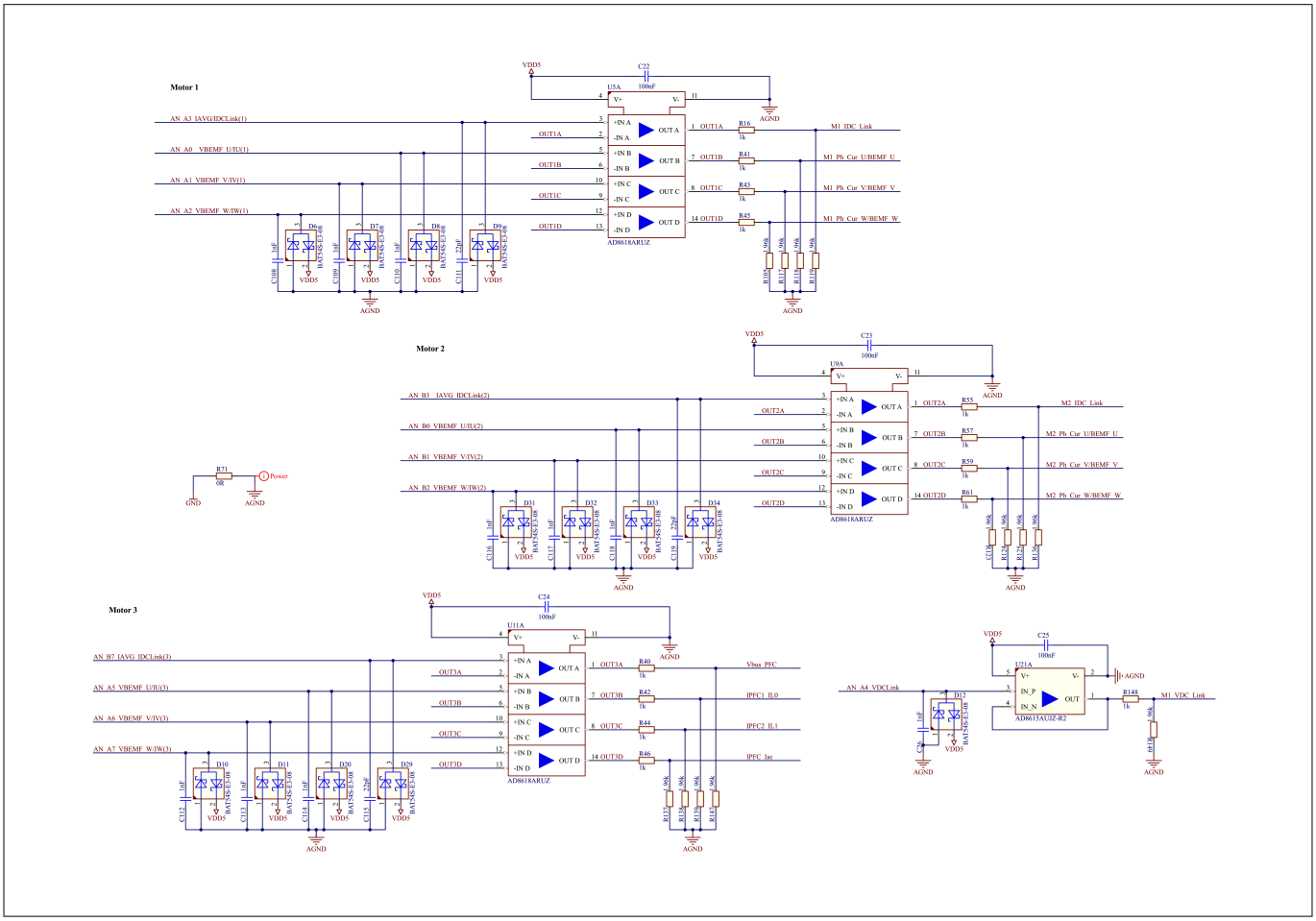

Figure 18 ADC signal input buffers and scaling circuit

The analog signals coming from power stages, such as phase currents or back electromotive force (BEMF) voltages, DC link current, bus voltage, etc., are buffered using a unity gain amplifier followed by a potential divider to make 5 V analog signals compatible with the 3.3 V analog-to-digital converter (ADC) in the PSOC™ Control C3 MCU. When using a power stage with 3.3 V compatible analog signals, the divider network can be disabled by removing the 1.96 kΩ low-side resistors: R105, R117, R118, P119, R123, R124, R125, R136, R137, R138, R139, R147, and R149.

3.8 Reset and user buttons

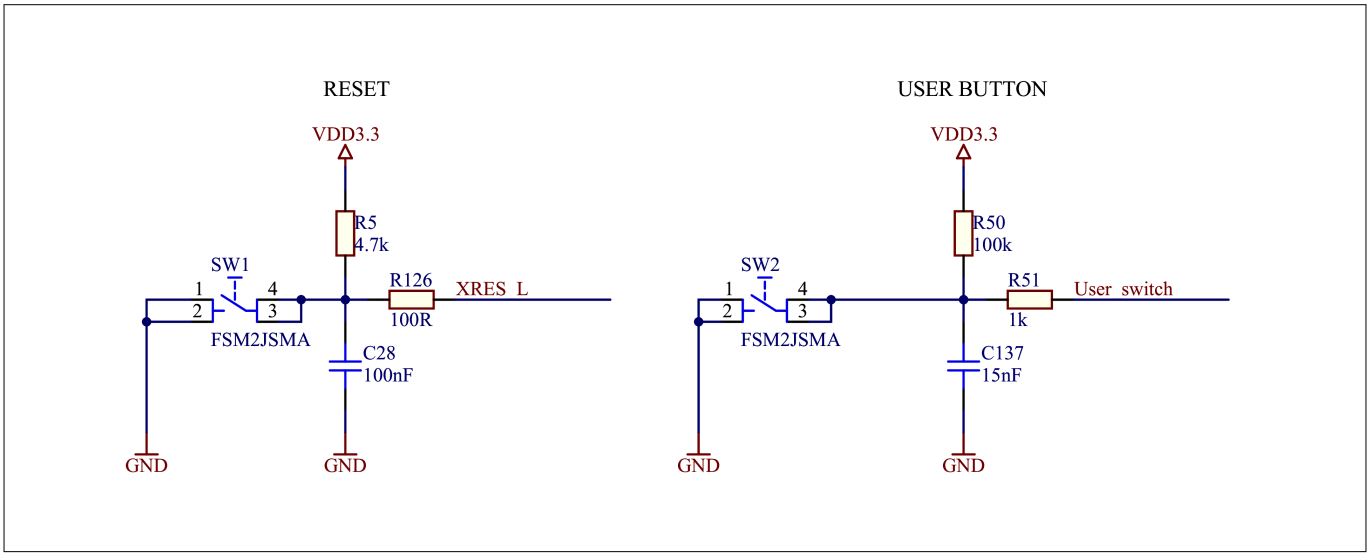

Figure 19 Reset and user buttons

The board features a reset button (SW1) connected to the PSOC™ Control C3 MCU XRES pin. It also includes a user button (SW2), which can be used to change the motor direction of rotation or for any other user-defined operation.

Table 5 Reset and user button connection details

Designator	Name	Connected to signal	PSC3 pin
SW1	RESET	XRES_L	XRES
SW2	USER BUTTON	User_switch	P4.6

3.9 Potentiometers and user LEDs

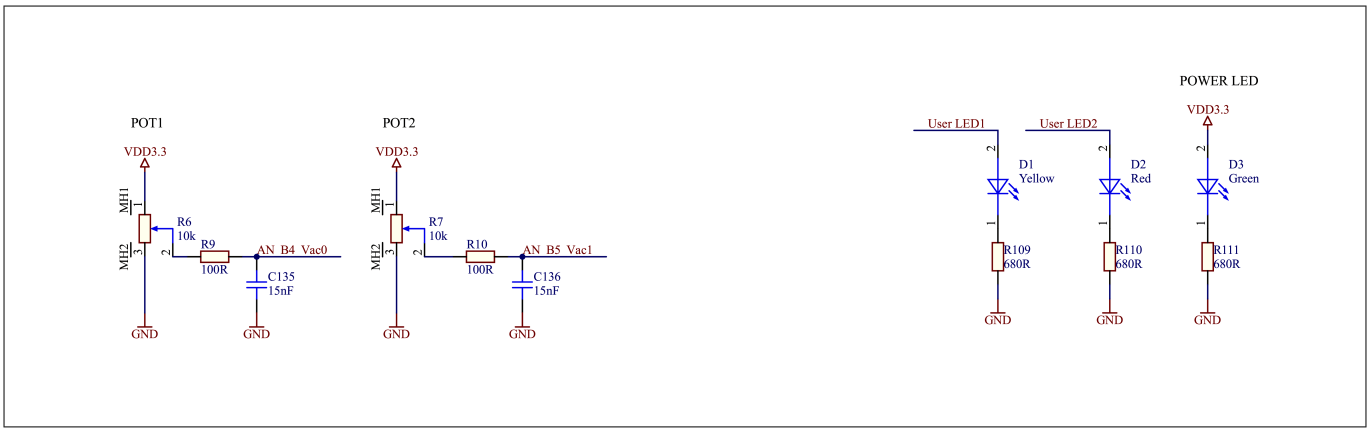

Figure 20 Potentiometers and user LEDs

The board features two potentiometers connected to ADC inputs, which are used for controlling the motor speed. Additionally, the board includes two user LEDs (D1 and D2) that can be controlled using MCU GPIOs.

Table 6 Potentiometer and user LED connection details

Designator	Name	Connected to signal	PSC3 pin
POT1	Potentiometer 1	Vac0 (X15, X17, X18)	AN_B4
POT2	Potentiometer 2	Vac1 (X15, X17)	AN_B5
D1	User LED1	User_LED1	P9.4
D2	User LED2	User_LED2	P9.5

3.10 Digital isolators and CAN interface

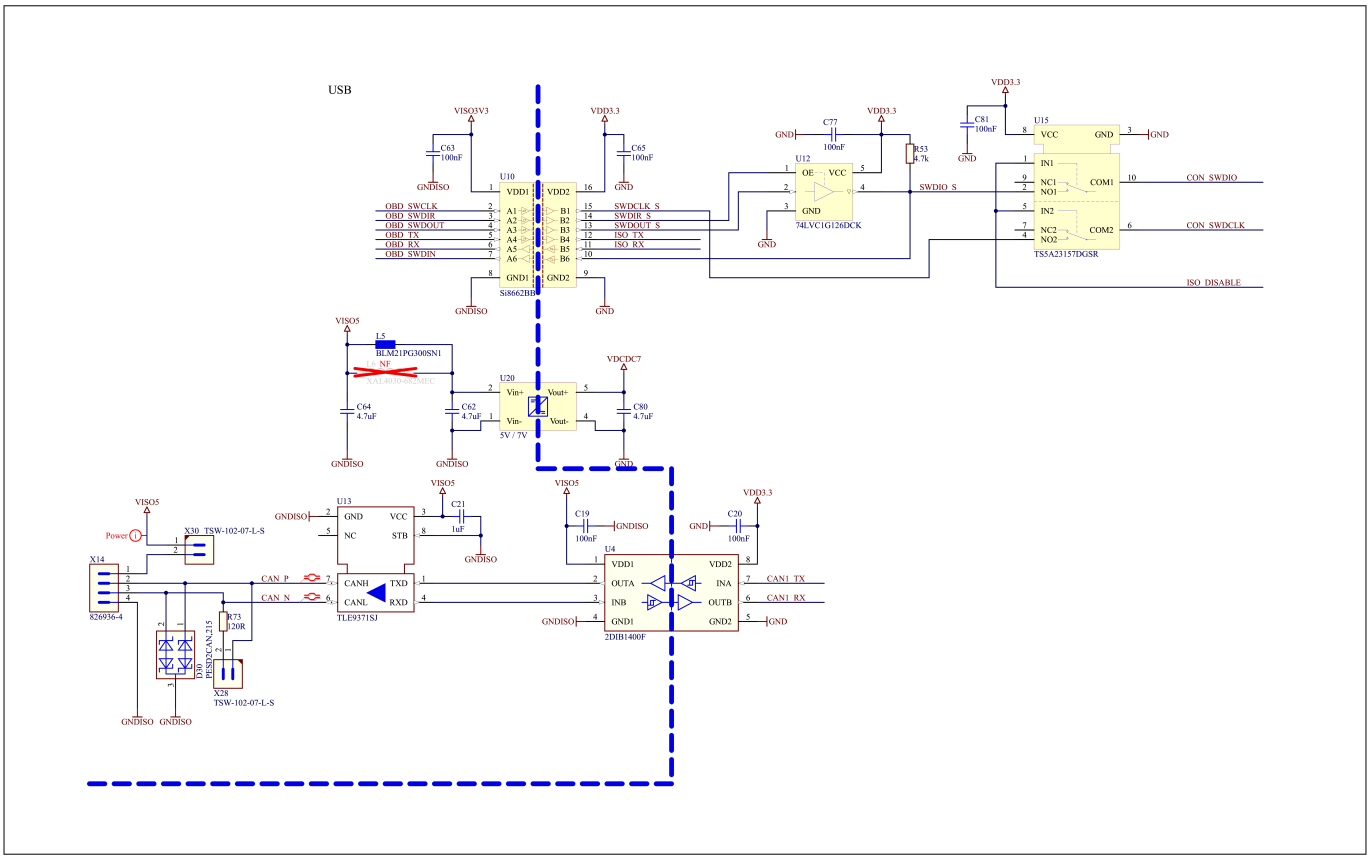

Figure 21 Digital isolators and CAN interface

Isolation for the SWD and UART lines is achieved using a digital isolator (U10). The CAN signal uses a dedicated isolator (U4), while the USB power supply is isolated from the target side using an isolated DC-DC converter (U20). An isolated CAN interface is available on the X14 header. Additionally, by mounting the X28 jumper, a 120 Ω termination resistor can be enabled on the CAN_P and CAN_N lines.

Table 7 CAN header (X14) pinout details

Pin	Signal name	PSC3 Pin	Description
1	VISO5	-	+5 V supply
2	CAN_P	CAN1_TX (P6.3)	CAN1_TX signal from MCU
3	CAN_N	CAN1_RX (P6.2)	CAN1_RX signal to MCU
4	GND	GND	Power

3.11 PSOC™ Control C3M5 MCU clock architecture

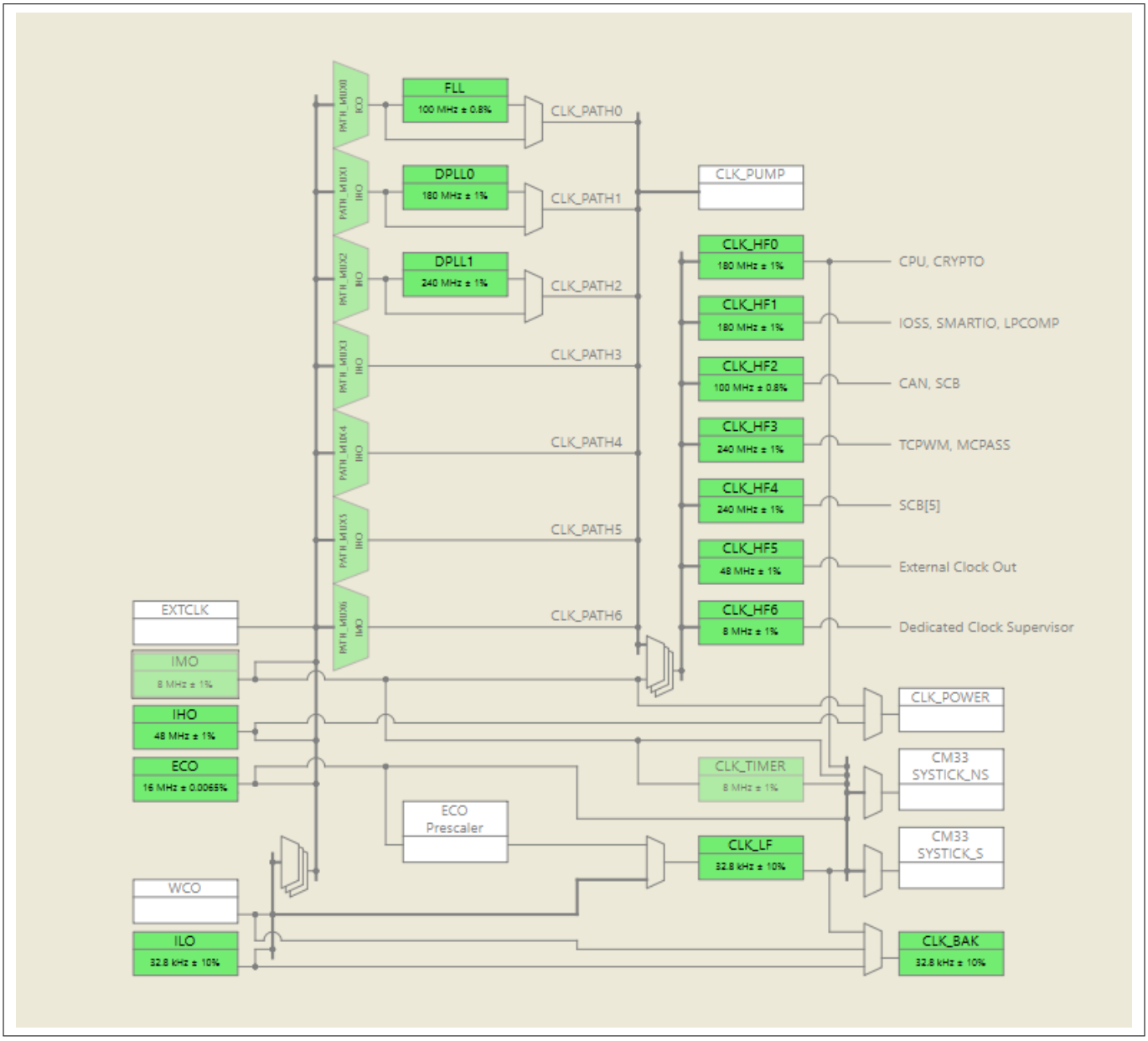

Figure 22 PSOC™ Control C3 MCU clock architecture

Figure 22 shows the MCU clocking scheme. A 16 MHz ECO is used as a source for the FLL, while a 48 MHz IHO is used as a source for DPLL0 and DPLL1. The FLL is configured to 100 MHz and supplies the clock to CLK_HF2 (CAN, SCB). DPLL0 is configured to 180 MHz and supplies the clock to CLK_HF0 (CPU, Crypto) and CLK_HF1 (IOSS, SMARTIO, LPCOMP). DPLL1 is configured to 240 MHz and supplies the clock to CLK_HF3 (TCPWM, MCPASS) and CLK_HF4 (SCB5). Other clocks are optional.

3.12 PSOC™ Control C3M5 MCU external programming or debugging headers

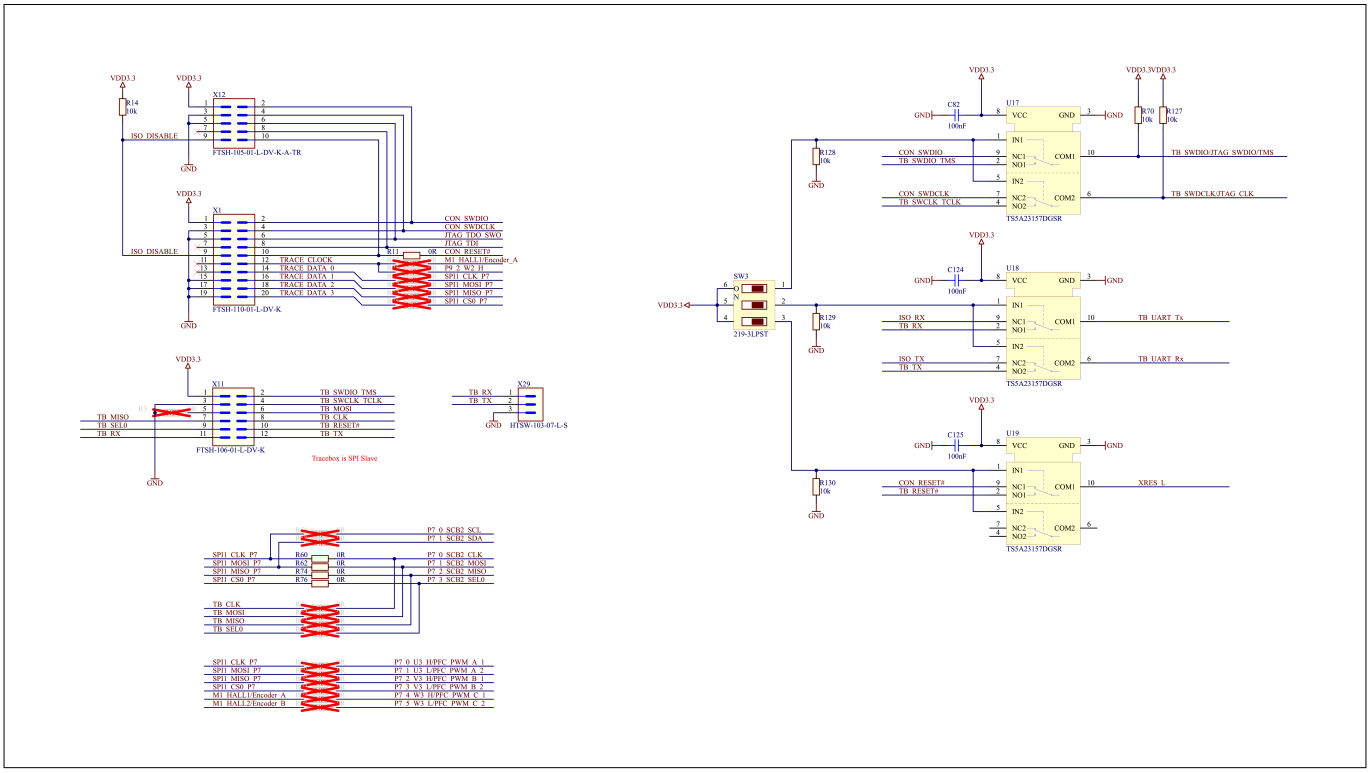

Figure 23 External debugger connections

The board features a 10-pin Cortex® header (X12) and a 20-pin ETM header (X1). It also includes a proprietary 12-pin header (X11) with SWD, UART, and SPI interfaces. All the headers have a 1.27 mm pitch.

The selection between the onboard debugger or the Cortex® 10-pin header (X12) and the proprietary 12-pin header (X11) is managed using the SW3 DIP switches.

***Note**: The external debugger or serial interfaces are not isolated.*

3.13 XMC4200 as an onboard programmer/debugger

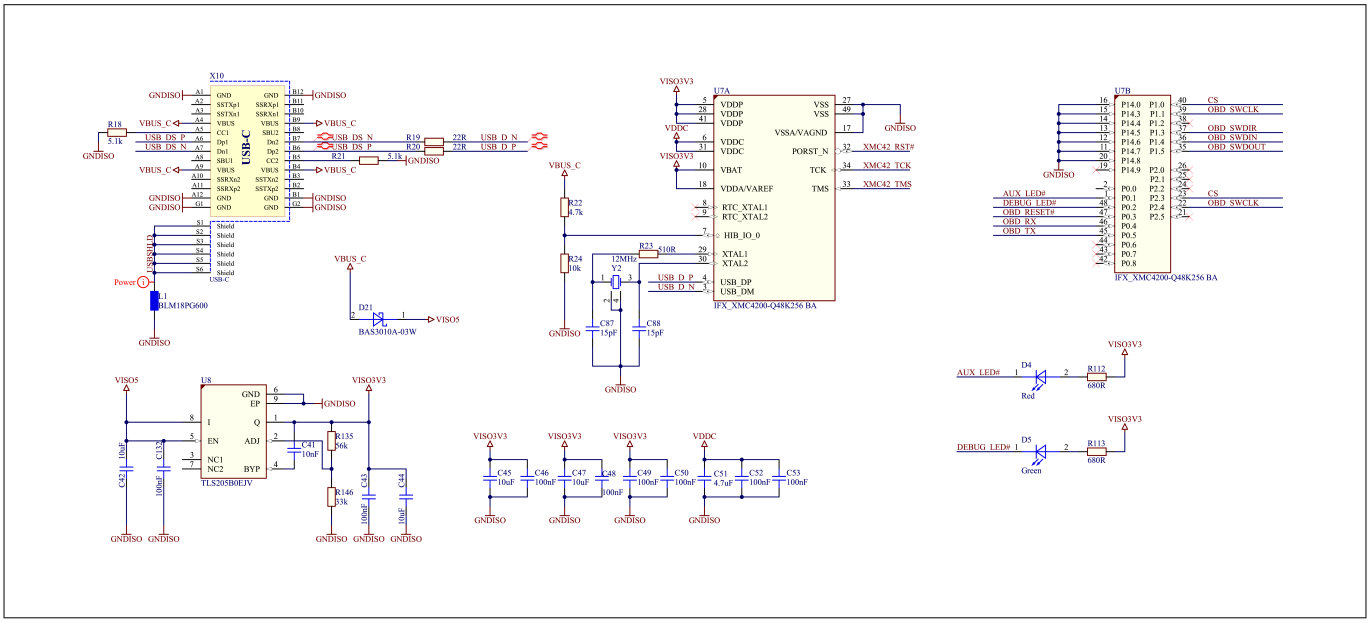

Figure 24 XMC4200-based J-Link lite programmer/debugger

The XMC4200 (U7)-based onboard J-Link Lite programmer/debugger provides the SWD interface as well as the UART interface over USB for the target MCU. XMC4200 is powered using the 5 V USB supply, which is converted to 3.3 V using the U8 voltage regulator. The debug LED (D5) is ON when the USB interface is connected to the PC. The aux LED (D4) blinks during active communication between the debugger and the target MCU.

3.14 Hall sensor and encoder interface

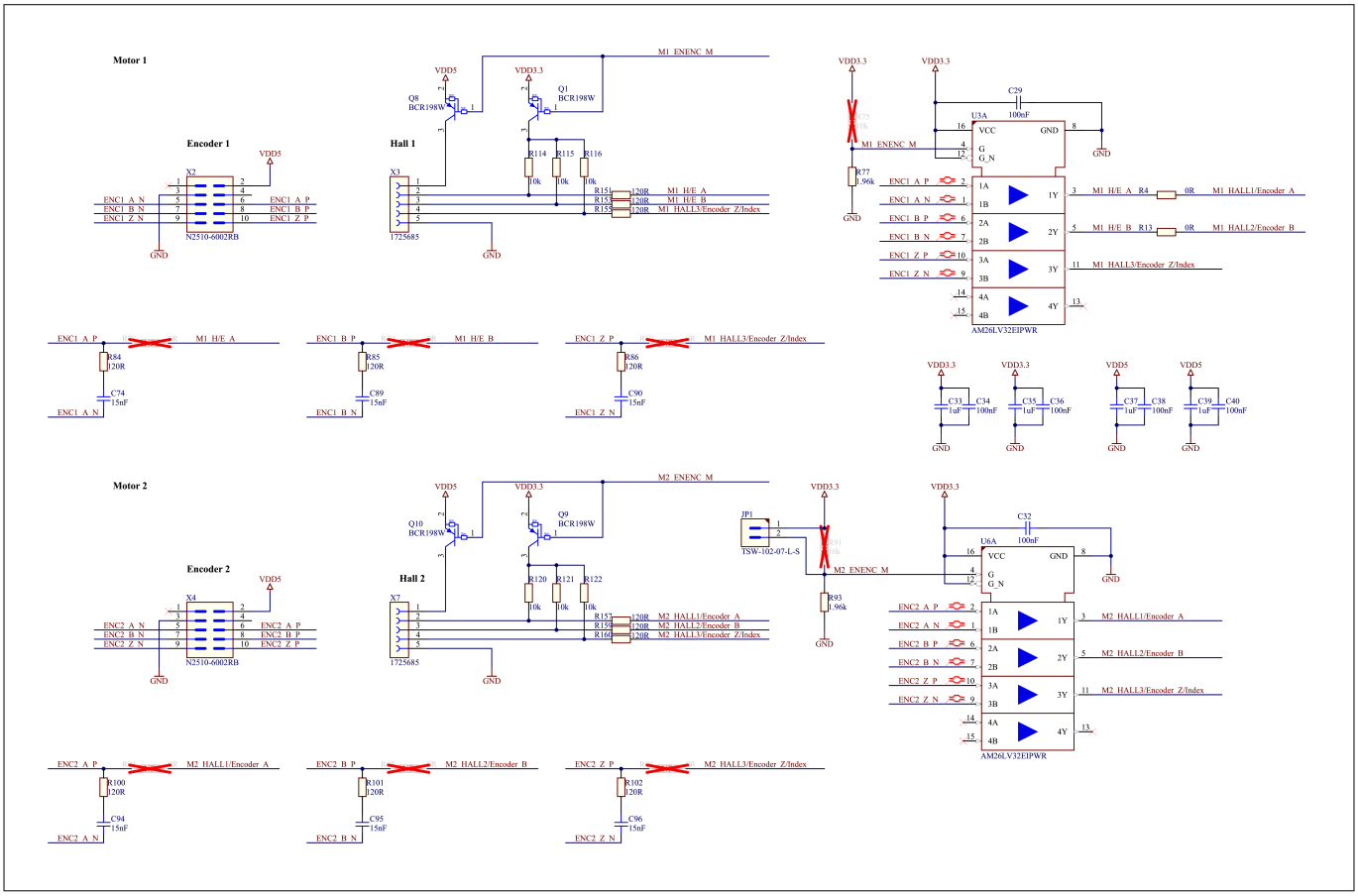

Figure 25 Hall sensor and encoder interface

The Hall sensors (X3 and X7) and encoder interfaces (X2 and X4) allow users to connect motors with Hall sensors or incremental encoders for sensor-based motor control applications. The board supports both differential and single-ended ABZ encoders. When using single-ended encoders, the input signal is connected to the ENCx_A_P, ENCx_B_P, and ENCx_Z_P pins of the X2 and X4 connectors, while the corresponding N lines are connected to GND.

For motor 1, the selection between the Hall sensor or encoder is done using the M1_ENENC_M signal connected to P4.7 of the MCU. When this pin is set to logic low, the Hall 1 inputs (X3) are enabled. When set to logic high, the encoder 1 inputs (X2) are enabled. For motor 2, this selection is done using the jumper JP1. When JP1 is open, the Hall 2 inputs (X7) are enabled. When JP1 is closed, the encoder 2 inputs (X4) are enabled.

Table 8 Hall 1 (X3) pinout details

Pin	PSC3 pin	Description
1	-	+5 V supply
2	P7.4	Hall 1 input for motor 1
3	P7.5	Hall 2 input for motor 1
4	P7.6	Hall 3 input for motor 1
5	GND	Ground

Table 9 Hall 2 (X7) pinout details

Pin	PSC3 pin	Description
1	-	+5 V supply
2	P3.0	Hall 1 input for motor 2
3	P3.1	Hall 2 input for motor 2
4	P3.2	Hall 3 input for motor 2
5	GND	Ground

Table 10 Encoder 1 (X2) pinout details

Pin	PSC3 pin	Description
1	-	-
2	-	+5 V supply VDD5
3	GND	Ground
4	-	-
5	-	ENC1_A_N for motor 1
6	P7.4	ENC1_A_P for motor 1
7	-	ENC1_B_N for motor 1
8	P7.5	ENC1_B_P for motor 1
9	-	ENC1_Z_N for motor 1
10	P7.6	ENC1_Z_P for motor 1

Table 11 Encoder 2 (X4) pinout details

Pin	PSC3 pin	Description
1	-	-
2	-	+5 V supply VDD5
3	GND	Ground
4	-	-
5	-	ENC1_A_N for motor 2
6	P3.0	ENC1_A_P for motor 2
7	-	ENC1_B_N for motor 2
8	P3.1	ENC1_B_P for motor 2
9	-	ENC1_Z_N for motor 2
10	P3.2	ENC1_Z_P for motor 2

3.15 Driver adapter card

3.15.1 Drive adapter card (Pre-January 2026 version)

The drive adapter card provides the following interfaces:

- 100-pin HD connector for the control card
- 2x M1/M3 connectors for compatible MADK power boards
- 1x M5 connector for compatible MADK power boards
- 2x Samtec connectors for compatible power boards
- Expansion header interface with a standard 2.54 mm pitch

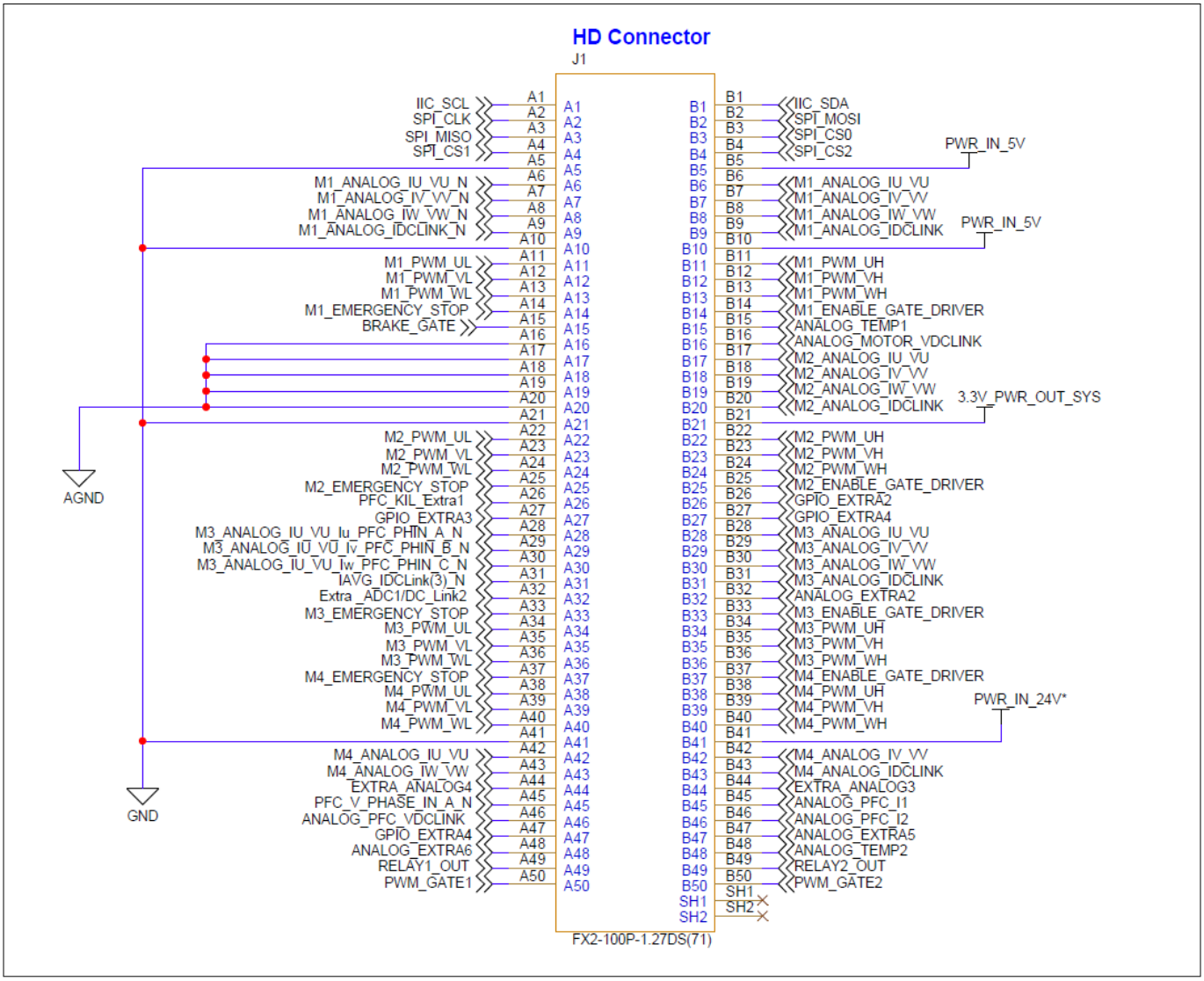

Figure 26 Drive adapter card 100-pin HD connector

Table 12 X15 HD connector peripheral details

J1 pin	Type	Functionality	J1 pin	Type	Functionality
A1	Digital	I2C SCL	B1	Digital	I2C SDA
A2	Digital	SPI CLK	B2	Digital	SPI MOSI

(table continues...)

Table 12 (continued) X15 HD connector peripheral details

J1 pin	Type	Functionality	J1 pin	Type	Functionality
A3	Digital	SPI MISO	B3	Digital	SPI CS0
A4	Digital	SPI CS1	B4	Digital	SPI CS2
A5	GND	Ground	B5	PWR_IN_5V	5 V from power board
A6	Analog	VBEMFU/IU(1) N	B6	Analog	VBEMFU/IU(1)
A7	Analog	VBEMFV/IV(1) N	B7	Analog	VBEMFV/IV(1)
A8	Analog	VBEMFW/IW(1) N	B8	Analog	VBEMFW/IW(1)
A9	Analog	IAVG/IDCLink(1) N	B9	Analog	IAVG/IDCLink(1)
A10	GND	Ground	B10	PWR_IN_5V	5 V from power board
A11	Digital	U1L	B11	Digital	U1H
A12	Digital	V1L	B12	Digital	V1H
A13	Digital	W1L	B13	Digital	W1H
A14	Digital	KILL_1	B14	Digital	ENPOW1
A15	Digital	Brake Gate	B15	Analog	Temperature1
A16	AGND	Analog ground	B16	Analog	VDCLink1
A17	AGND	Analog ground	B17	Analog	VBEMFU/IU(2)
A18	AGND	Analog ground	B18	Analog	VBEMFV/IV(2)
A19	AGND	Analog ground	B19	Analog	VBEMFW/IW(2)
A20	AGND	Analog ground	B20	Analog	IAVG/IDCLink(2)
A21	GND	Ground	B21	PWR_OUT_SYS	3.3 V from control board
A22	Digital	U2L	B22	Digital	U2H
A23	Digital	V2L	B23	Digital	V2H
A24	Digital	W2L	B24	Digital	W2H
A25	Digital	KILL2	B25	Digital	ENPOW2
A26	Digital	PFC Kill Extra1	B26	Digital	GPIO Extra2
A27	Digital	GPIO Extra3	B27	Digital	GPIO Extra4
A28	AGND	VBEMFU/IU(3) N or PFC PHA	B28	Analog ground	VBEMFU/IU(3)
A29	AGND	VBEMFV/IV(3) N or PFC PHB	B29	Analog ground	VBEMFV/IV(3)
A30	AGND	VBEMFW/IW(3) N or PFC PHC	B30	Analog ground	VBEMFW/IW(3)

(table continues...)

Table 12 (continued) X15 HD connector peripheral details

J1 pin	Type	Functionality	J1 pin	Type	Functionality
A31	AGND	IAVG/IDCLink(3)N	B31	Analog ground	IAVG/IDCLink(3)
A32	Analog	ADC Extra1	B32	Analog	ADC Extra2
A33	Digital	KILL3	B33	Digital	ENPOW3
A34	Digital	U3L/PFC_PWM_A_2	B34	Digital	U3H/PFC_PWM_A_1
A35	Digital	V3L/PFC_PWM_B_2	B35	Digital	V3H/PFC_PWM_B_1
A36	Digital	W3L/PFC_PWM_C_2	B36	Digital	W3H/PFC_PWM_C_1
A37	Digital	KILL4	B37	Digital	ENPOW4
A38	Digital	U4L	B38	Digital	U4H
A39	Digital	V4L	B39	Digital	V4H
A40	Digital	W4L	B40	Digital	W4H
A41	GND	Ground	B41	PWR_IN_24V	24 V supply from power board
A42	Analog	VBEMFU/IU(4)	B42	Analog	VBEMFV/IV(4)
A43	Analog	VBEMFW/IW(4)	B43	Analog	IAVG/IDCLink(4)
A44	Analog	ADC Extra4	B44	Analog	ADC Extra3
A45	Analog	PFC_V_Phase_IN_A	B45	Analog	PFC_I1
A46	Analog	PFC_VDCLink	B46	Analog	PFC_I2
A47	Digital	ADC Extra4	B47	Analog	ADC_Extra5
A48	Analog	ADC_Extra6	B48	Analog	Analog_Temp2
A49	Digital	Relay1_Out	B49	Digital	Relay2_Out
A50	Digital	PWM_Gate1	B50	Digital	PWM_Gate2

***Note**: The drive adapter card is a generic interface designed for multiple control cards. Refer to the control card pinouts for the specific functionality and MCU pin mapping of the 100-pin HD connector.*

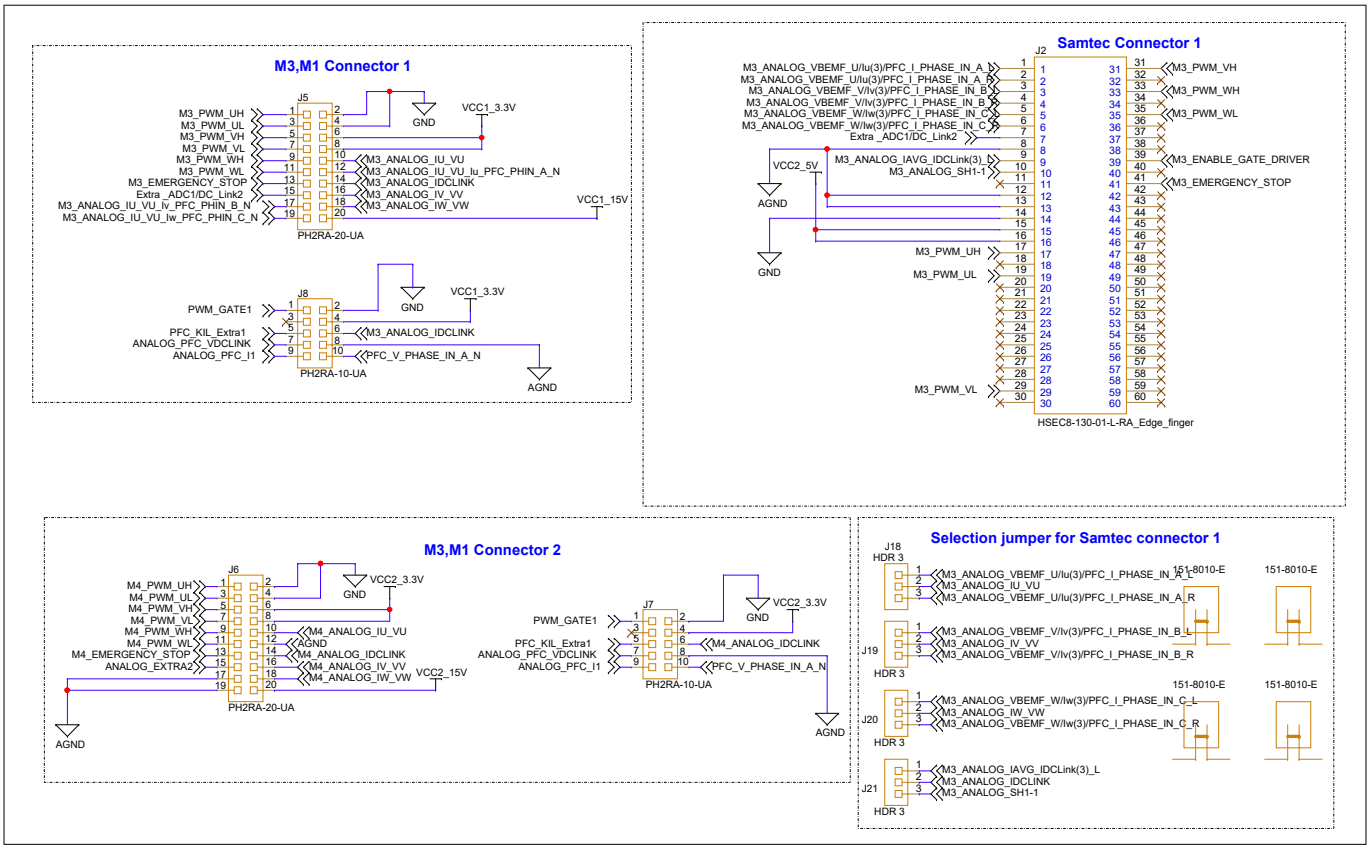

Figure 27 M3, M1 connectors and Samtec connector 1

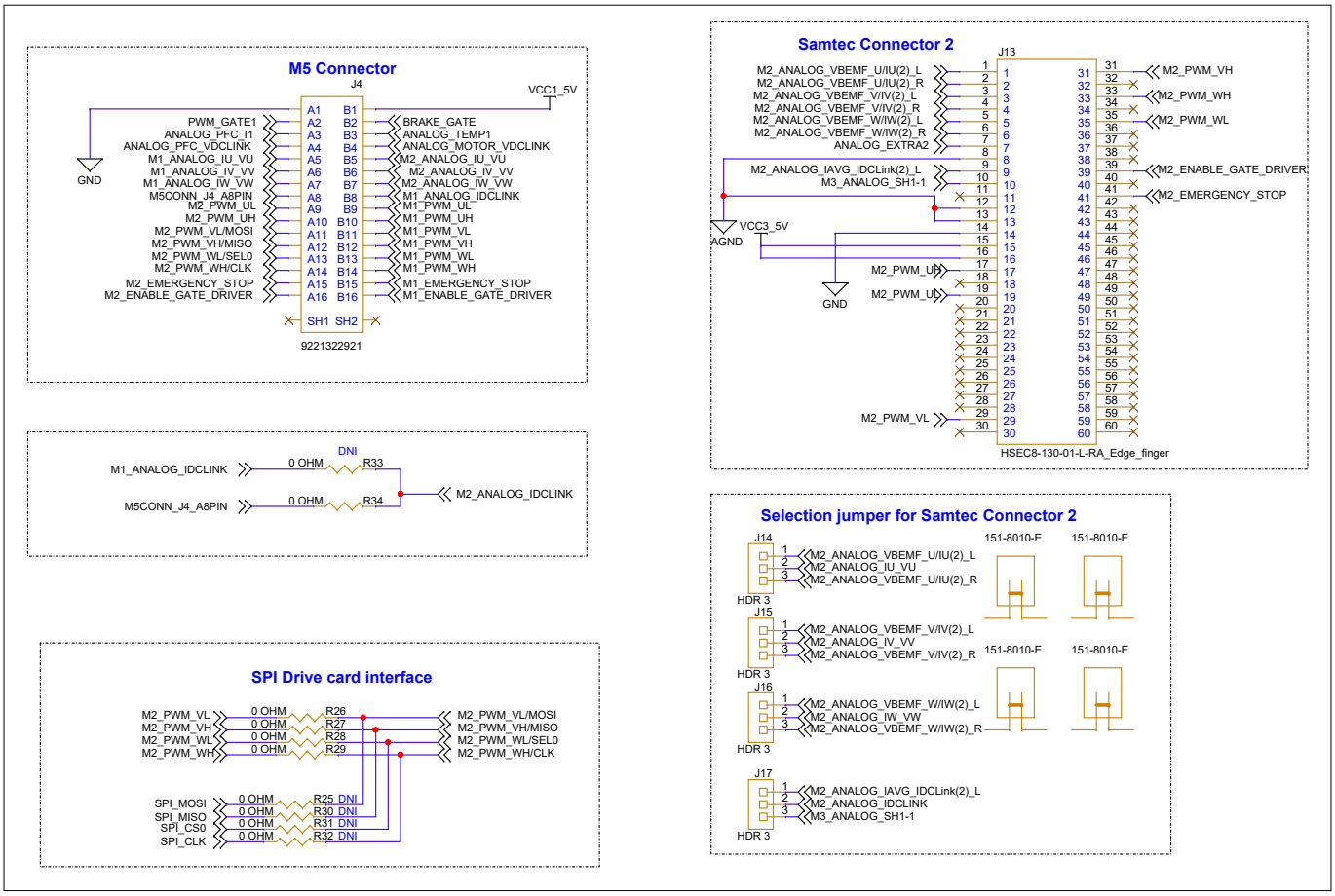

Figure 28 M5 connector and Samtec connector 2

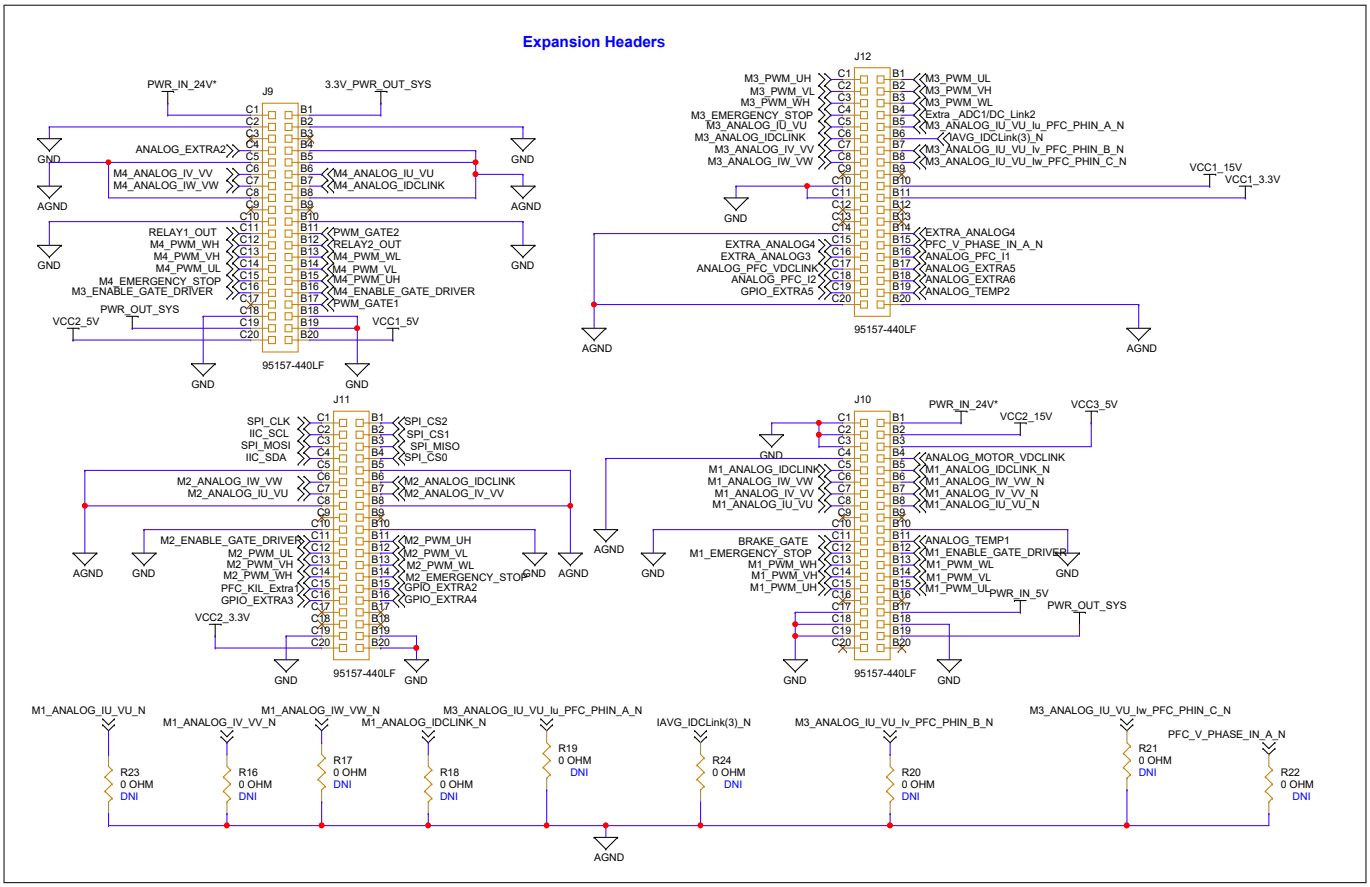

Figure 29 Drive adapter card expansion headers

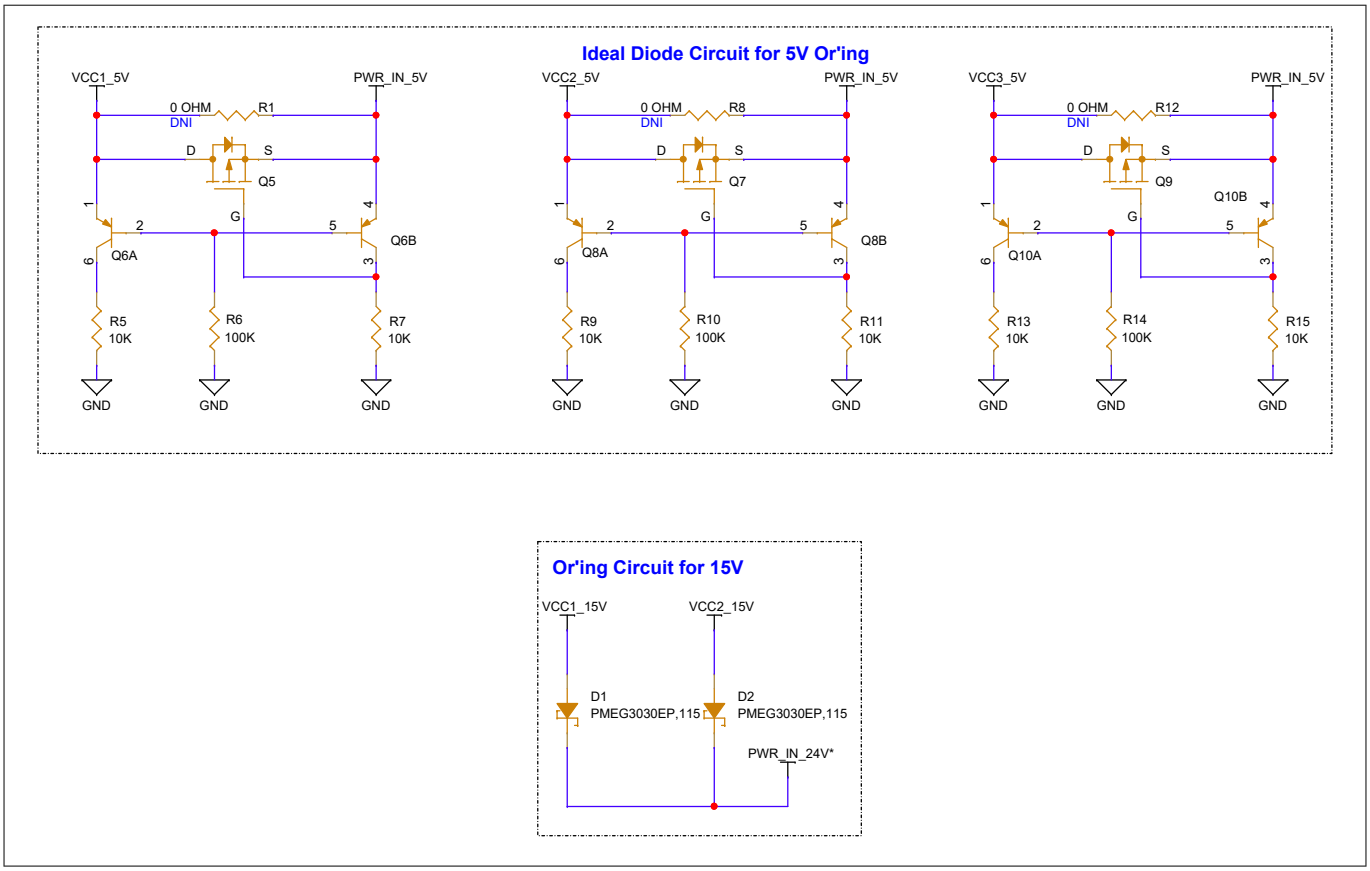

Figure 30 Power supply ORing circuits

3.15.2 Drive Adapter Card V2 (Post-January 2026 Version)

The drive adapter card provides the following interfaces:

- 100-pin HD connector for the control card
- 1x M1/M3 connectors for compatible MADK power boards
- 2x M5 connector for compatible MADK power boards
- 2x4 Header for SPI communication
- 2x3 Header for ABZ encoder interface

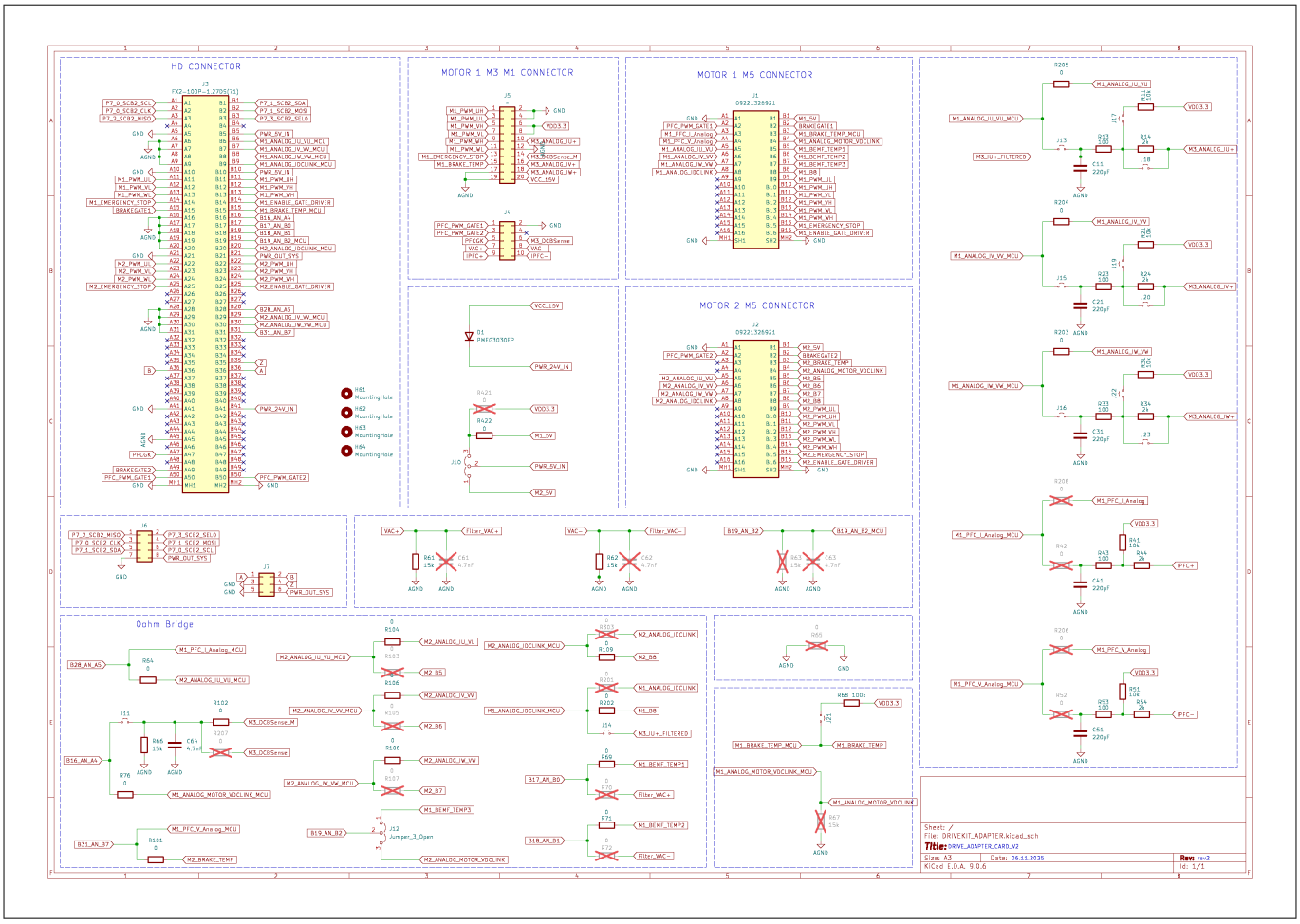

Figure 31 Driver adapter card V2

Table 13 X15 HD connector peripheral details

J1 pin	Type	Functionality	J1 pin	Type	Functionality
A1	Digital	I2C SCL	B1	Digital	I2C SDA
A2	Digital	SPI CLK	B2	Digital	SPI MOSI
A3	Digital	SPI MISO	B3	Digital	SPI CS0
A4	-	-	B4	-	-
A5	GND	Ground	B5	PWR_IN_5V	5 V from power board
A6	AGND	Analog ground	B6	Analog	VBEMFU/IU(1)
A7	AGND	Analog ground	B7	Analog	VBEMFV/IV(1)
A8	AGND	Analog ground	B8	Analog	VBEMFW/IW(1)
A9	AGND	Analog ground	B9	Analog	IAVG/IDCLink(1)
A10	GND	Ground	B10	PWR_IN_5V	5 V from power board
A11	Digital	PWM U1L	B11	Digital	PWM U1H

(table continues...)

Table 13 (continued) X15 HD connector peripheral details

J1 pin	Type	Functionality	J1 pin	Type	Functionality
A12	Digital	PWM V1L	B12	Digital	PWM V1H
A13	Digital	PWM W1L	B13	Digital	PWM W1H
A14	Digital	KILL_1 Emergency Stop	B14	Digital	ENPOW1 Enable Driver
A15	Digital	Brake Gate	B15	Analog	Temperature1
A16	AGND	Analog ground	B16	Analog	VDCLink1
A17	AGND	Analog ground	B17	Analog	VBEMFU(1)/ MADK_VAC+
A18	AGND	Analog ground	B18	Analog	VBEMFV(1)/ MADK_VAC-
A19	AGND	Analog ground	B19	Analog	VBEMFW(1)/ VDCLink2
A20	AGND	Analog ground	B20	Analog	IAVG/IDCLink(2)
A21	GND	Ground	B21	PWR_OUT_SYS	3.3 V from control board
A22	Digital	PWM U2L	B22	Digital	PWM U2H
A23	Digital	PWM V2L	B23	Digital	PWM V2H
A24	Digital	PWM W2L	B24	Digital	PWM W2H
A25	Digital	KILL2 Emergency Stop	B25	Digital	ENPOW2 Enable Driver
A26	-	-	B26	-	-
A27	-	-	B27	-	-
A28	AGND	Analog ground	B28	Analog ground	VBEMF/IU(2)
A29	AGND	Analog ground	B29	Analog ground	VBEMFV/IV(2)
A30	AGND	Analog ground	B30	Analog ground	VBEMFW/IW(2)
A31	AGND	Analog ground	B31	Analog ground	PFC_V/ Temperature
A32	-	-	B32	-	-
A33	-	-	B33	-	-
A34	-	-	B34	-	-
A35	-	-	B35	Digital	Encoder Z
A36	Digital	Encoder A	B36	Digital	Encoder A
A37	-	-	B37	-	-
A38	-	-	B38	-	-
A39	-	-	B39	-	-
A40	-	-	B40	-	-

(table continues...)

Table 13 (continued) X15 HD connector peripheral details

J1 pin	Type	Functionality	J1 pin	Type	Functionality
A41	GND	Ground	B41	PWR_IN_24V	24 V supply from power board
A42	-	-	B42	-	-
A43	-	-	B43	-	-
A44	-	-	B44	-	-
A45	Analog	Analog ground	B45	-	-
A46	-	-	B46	-	-
A47	Digital	Gate KILL	B47	-	-
A48	-	-	B48	-	-
A49	Digital	Brake Gate2	B49	-	-
A50	Digital	PWM_Gate1	B50	Digital	PWM_Gate2

***Note**: The drive adapter card is a generic interface designed for multiple control cards. Refer to the control card pinouts for the specific functionality and MCU pin mapping of the 100-pin HD connector.*

Table 14 Jumpers setting-Drive Adapter card V2

Jumpers Name	Default connection	Description
J10	Close	PWR_5V_IN - M1_5V
J11	Open	NC (No Connection)
J12	Close	M1_BEMF_TEMP3 - B19_AN_B2
J13	Open	NC
J14	Open	NC
J15	Open	NC
J16	Open	NC
J17	Close	Pull up of 10KOhm connected
J18	Open	NC
J19	Close	Pull up of 10KOhm connected
J20	open	NC
J21	close	Pull up of 10KOhm connected
J22	Close	Pull up of 10KOhm connected
J23	Open	NC

4 Production data

The KIT_PSC3M5_CC2 control board is designed with Altium, while the drive adapter card is designed in Orcad. The complete PCB design data, schematics, layout, and BOM for this board can be downloaded from the kit webpage.

Revision history

Document version	Date of release	Description of changes
**	2024-09-20	Initial release
*A	2024-12-05	• Updated the Key features section • Updated Figure 2, Figure 3, and Figure 5 • Updated Figure 7 • Updated the PSOC™ Control C3M5 motor control card section • Updated Figure 13 • Updated the Drive adapter card (Pre-January 2026 version) section
*B	2026-04-14	• Updated Kit operation • Updated Using the OOB example • Updated Driver adapter card

Trademarks

The Bluetooth® word mark and logos are registered trademarks owned by Bluetooth SIG, Inc., and any use of such marks by Infineon is under license.

PSOC™, formerly known as PSoC™, is a trademark of Infineon Technologies. Any references to PSoC™ in this document or others shall be deemed to refer to PSOC™.

Trademarks

All referenced product or service names and trademarks are the property of their respective owners.

Edition 2026-04-14

Published by

Infineon Technologies AG

81726 Munich, Germany

© 2026 Infineon Technologies AG

All Rights Reserved.

Do you have a question about any aspect of this document?

Email: erratum@infineon.com

Document reference
IFX-lci1715948144095

For further information on the product, technology, delivery terms and conditions and prices please contact your nearest Infineon Technologies office (www.infineon.com)

Warnings

Due to technical requirements products may contain dangerous substances. For information on the types in question please contact your nearest Infineon Technologies office.

Except as otherwise explicitly approved by Infineon Technologies in a written document signed by authorized representatives of Infineon Technologies, Infineon Technologies' products may not be used in any applications where a failure of the product or any consequences of the use thereof can reasonably be expected to result in personal injury.