Low-side MOSFET driver with fast over-current protection (negative current sense) and fault/enable

1ED44173N01B Technical description

About this document

Scope and purpose

This application note describes the features and key advantages of using Infineon's 1ED44173N01B gate driver. This document will help the designer use the device within the recommended operating range by explaining how to select the current-sensing shunt resistor (R_{CS}), resistor and capacitor (RC) filter for overcurrent protection (OCP) and short-circuit protection (SCP), resistor and capacitor for fault clear time, and how to design the interfacing circuitry with the controller. A simple adapter board to evaluate 1ED44173N01B and the test result of the adapter board for one PFC demo board are also included. This application note provides detailed information to help speed up design time and avoid circuit problems that can occur due to incorrect usage of the driver.

Intended audience

This document is intended for people and designers who are looking to reduce their system cost and space while increasing the power density of their design with 1ED44173N01B.

Ordering information

Base Part Number	Package	Standard Pack		Orderable Part Number
		Form	Quantity	
EVAL-1ED44173N01B	EVAL	Boxed	1	EVAL1ED44173N01BTOBO1
1ED44173N01B	PG-SOT23-6	Tape and Reel	3000	1ED4473N01BXTSA1
IPW65R045C7	PG-TO 247-3	Tube	240	IPW65R045C7FKSA1

Table of Contents

About this document **1**
Table of Contents **2**
1 Product overview **3**
1.1 Internal block diagram and features 3
1.2 The detailed features and integrated functions of 1ED44173N01B 3
1.2.1 Features 3
1.2.2 Functions 3
1.3 Maximum electrical ratings 4
1.4 Description of the input and output pins 4
1.5 Outline drawings 6
2 Interface circuit and layout guide **7**
2.1 Input/Output signal connection 7
2.2 General interface circuit example 9
2.3 Recommended layout pattern for overcurrent protection (OCP) & short-circuit protection (SCP) functions 10
2.4 Recommended wiring of the bypass capacitors 10
2.5 Recommended PCB layout 11
3 Protection features **12**
3.1 Undervoltage lockout protection (UVLO) 12
3.2 Overcurrent protection (OCP) 14
3.2.1 Timing chart of OCP 14
3.2.2 Selecting R_{CS} 15
3.2.3 OCP delay time 15
3.3 Fault output circuit and fault clear time setup 17
3.4 Enable input circuit 18
4 Driving capability **20**
4.1 I_{O+} and I_{O-} 20
5 EVAL-1ED44175N01B adapter board **21**
5.1 The evaluation of 1ED44173N01B on the PFC board 22
5.1.1 The connection between the adapter board and PFC board 22
5.1.2 Normal operation 23
5.1.3 OCP 23
5.1.4 Short PFC inductor test 24
6 Recommended related products **25**
7 References **27**
8 Revision history **28**

1 Product overview

1.1 Internal block diagram and features

Figure 1 illustrates the internal block diagram of the 1ED44173N01B.

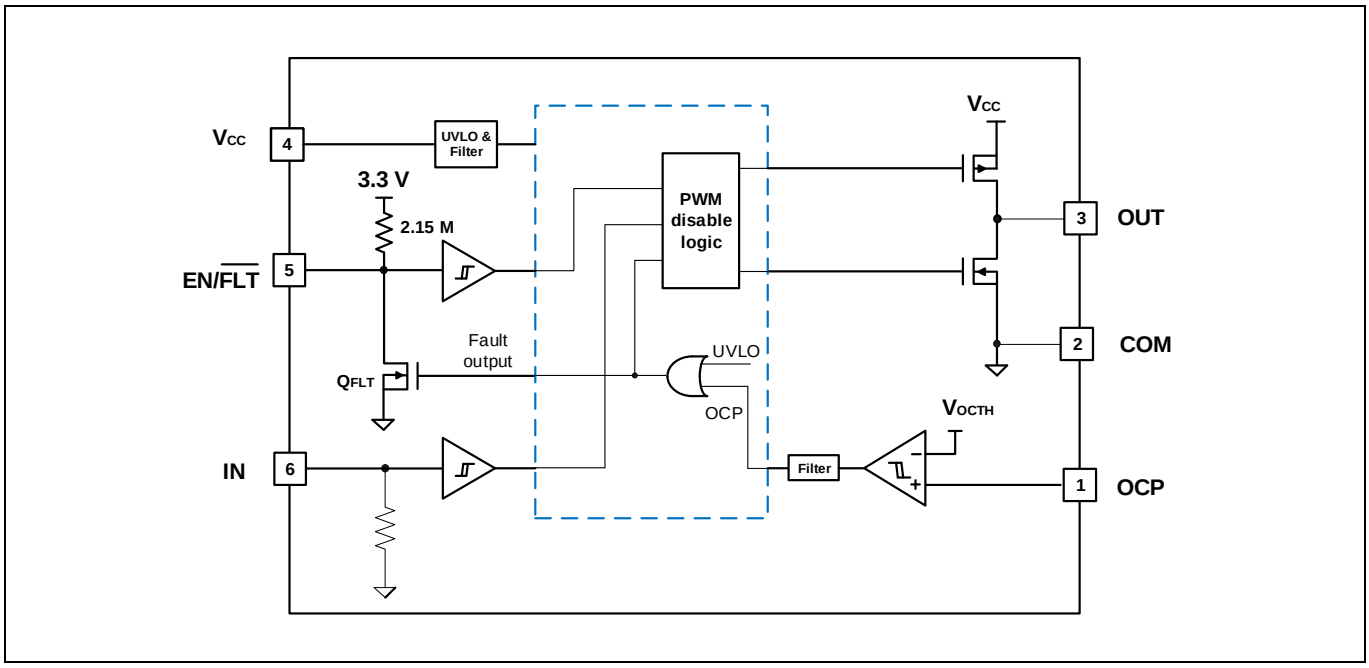

Figure 1 Internal block diagram

1.2 The detailed features and integrated functions of 1ED44173N01B

1.2.1 Features

- Overcurrent detection with negative voltage input
- -246 mV overcurrent threshold with accurate ±5% tolerance
- Single pin enable control and fault output indications
- Programmable fault clear time
- Undervoltage lockout for MOSFETs
- CMOS Schmitt-triggered inputs
- 3.3 V, 5 V and 15 V input logic-compatible
- 25 V V_{CC} voltage supply support (max)
- Output in phase with input
- 3 kV ESD HBM

1.2.2 Functions

- Overcurrent shutdown
- UVLO
- Fault output and Enable
- The OUT keeps “low” during protection time
- Active-high input signal logic

1.3 Maximum electrical ratings

Table 1 Detailed description of absolute maximum ratings

Symbol	Definition		Min.	Max.	Units
V_{CC}	Fixed supply voltage		– 0.3	25	V
V_O	Output voltage (OUT)		– 0.3	V_{CC} + 0.3	
V_{OCP}	Voltage at current sense pin (OCP)		– 10	V_{CC} +0.3	
$V_{EN/\overline{FLT}}$	Voltage at enable and fault reporting pin ($EN/\overline{FLT}$)		– 0.3	V_{CC} + 0.3	
V_{IN}	Logic input voltage (IN)		– 10	V_{CC} + 0.3	
P_D	Package power dissipation @ $T_A \leq 25°C$	PG-SOT-23-6	—	0.5	W
R_{thJA}	Thermal resistance, junction to ambient		—	250	°C/W
T_J	Junction temperature		– 40	150	°C
T_S	Storage temperature		– 55	150	
T_L	Lead temperature (soldering, 10 seconds)		—	260	

Table 1: Absolute maximum ratings indicate sustained limits beyond which damage to the device may occur. All voltage parameters are absolute voltages referenced to COM. The thermal resistance and power dissipation ratings are measured under board-mounted and still-air conditions.

1.4 Description of the input and output pins

Table 2 defines the 1ED44173N01B input and output pins. The detailed functional descriptions are as follows:

Table 2 Pin descriptions of 1ED44173N01B

Pin number	Pin name	Pin description
1	OCP	Current sense input
2	COM	Ground
3	OUT	Gate drive output
4	V_{CC}	Supply voltage
5	$EN/\overline{FLT}$	Enable, fault reporting and fault clear time program pin, three functions: 1. Logic input to enable I/O functionality. I/O logic functions when enable is high. 2. Fault reporting function like overcurrent or undervoltage lockout, this pin has negative logic and an open-drain output. 3. Fault clear time program with external resistor and capacitor.
6	IN	Logic input for gate driver output (OUT), in phase

Overcurrent detection pin

Pin 1: OCP

- The R_{CS} should be connected between the pin of system ground and the input power return to detect short-circuit current (refer to Figure 5). An RC filter needs to be connected between the shunt resistor and the OCP pin if the internal blanking time is not sufficient to eliminate the noise.
- The integrated comparator is triggered if the voltage of the OCP pin (V_{OCP}) is less than -246 mV. The shunt resistor should be selected to meet this level for the specific application. In case of a trigger event, the voltage at pin $\mathrm{EN}/\overline{\mathrm{FLT}}$ is pulled down to low.
- The connection length between the R_{CS} and OCP pin should be minimized.

Common supply ground pin

Pin 2: COM

- This pin connects the control ground for the internal circuit of the driver.

Gate drive output pin

Pin 3: OUT

- The pin is connected to the gate of the MOSFET by the gate resistor to turn the power device on or off.
- To prevent oscillations, a gate resistor is needed to be in series with the pin and the gate of MOSFET.

Bias voltage pin

Pin 4: V_{CC}

- This is the control supply pin for the internal IC.
- In order to prevent malfunctions caused by noise and ripple in the supply voltage, a good quality filter capacitor with low equivalent series resistance (ESR) and low equivalent series inductance (ESL) should be mounted very close to this pin and COM pin.

Fault output and enable pin

Pin 5: $\mathrm{EN}/\overline{\mathrm{FLT}}$

- This is a multifunctional pin. One function is the fault output. An active low output is given on this pin for a fault state condition in the 1ED44173N01B. The fault conditions are overcurrent detection and V_{CC} undervoltage operation. The $\mathrm{EN}/\overline{\mathrm{FLT}}$ output is open-drain configured. The $\mathrm{EN}/\overline{\mathrm{FLT}}$ signal line should be pulled up to the logic power supply (5 V or 3.3 V) with proper resistance.
- The second function is enabled. Externally pulling down the pin can disable the output. For normal operation, the pin needs to be pulled up.
- The third function is fault clear time program with external resistor and capacitor.

Signal input pin

Pin 6: IN

- This is the pin to control the operation of the external device.
- It is activated by voltage input signals. The terminal is internally connected to a Schmitt-trigger circuit.
- The signal logic of the pin is active-high. The device associated with the pin will be turned on when a sufficient logic voltage is applied to the pin.
- The wiring of the input should be as short as possible to protect the 1ED44173N01B against noise influences.
- To prevent signal oscillations, an RC coupling is recommended as illustrated in Figure 3.

1.5 Outline drawings

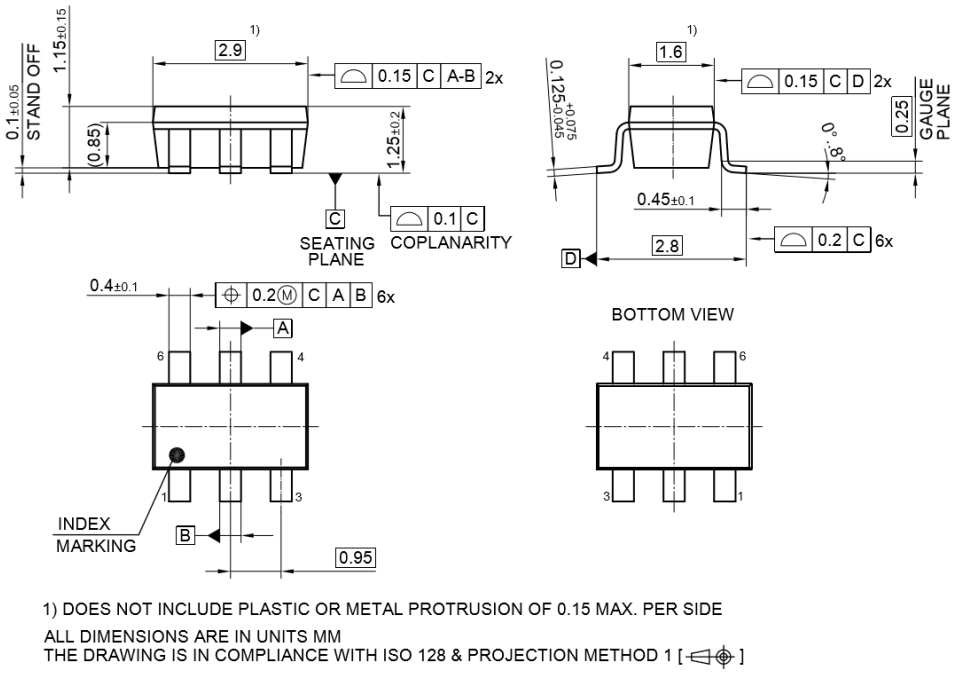

Figure 2 Package outline dimensions

2 Interface circuit and layout guide

2.1 Input/Output signal connection

Figure 3 shows the I/O interface circuit between a microcontroller (µC) or digital signal processing (DSP) unit and the 1ED44173N01B. The 1ED44173N01B input logic is active-high. The $\mathrm{EN}/\overline{\mathrm{FLT}}$ output is an open-drain configuration. This signal should be pulled up to high by an external logic power supply with a pull-up resistor. RC (1 KΩ / 100 pF) is recommended for the input pin to prevent input noise.

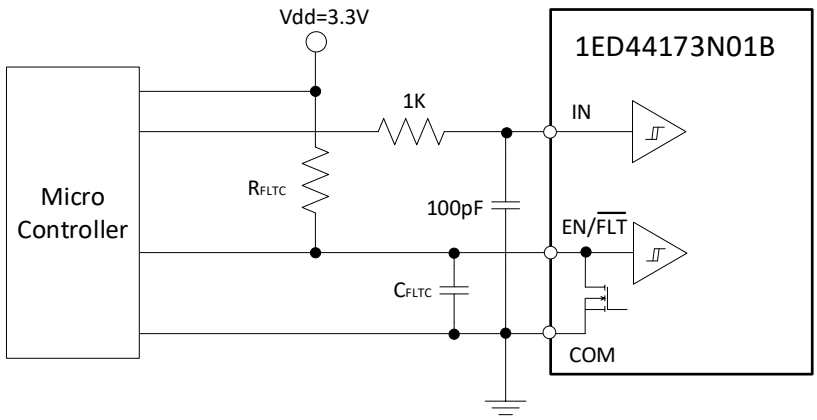

Figure 3 Recommended microcontroller I/O interface circuit

Table 3 Maximum ratings of IN and $\mathrm{EN}/\overline{\mathrm{FLT}}$ pins

Item	Symbol	Condition	Rating	Unit
Fixed supply voltage	V_{CC}	Applied between V_{CC} – COM	25	V
Logic input voltage	IN	Applied between IN – COM	-10 ~ V_{CC} + 0.3	V
Voltage at enable and fault reporting pin	$\mathrm{EN}/\overline{\mathrm{FLT}}$	Applied between $\mathrm{EN}/\overline{\mathrm{FLT}}$ – COM	-0.3 ~ V_{CC} + 0.3	V

The input and fault output maximum rating voltages are listed in Table 3. Since the fault output is open-drain configured and its rating is V_{CC} + 0.3 V, a 15 V supply interface is possible. However, it is recommended that the fault output be configured with the 3.3 V logic power supply, which is similar to the input signal.

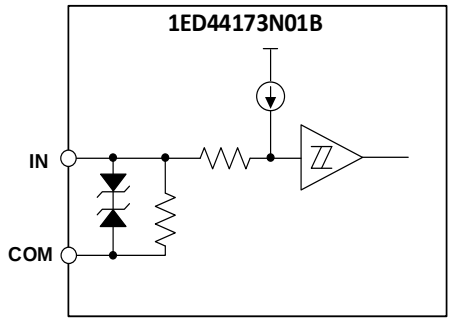

Figure 4 Simplified input structure diagram of 1ED44173N01B

The 1ED44173N01B input pin is internally clamped to COM by Zener diodes. It also includes a pull-down resistor and an input Schmitt trigger for better noise immunity. The input pin has the capability to process input voltage up to supply voltage of the driver, and is also compatible with 3.3 V µC or DSP. Table 4 shows the logic input threshold.

Table 4 Input threshold voltage (at V_{CC} = 15 V, T_J = 25 ℃)

Item	Symbol	Condition	Min.	Typ.	Max.	Unit
Logic "1" input voltage (IN)	V_{INH}	IN – COM	1.9	2.1	2.3	V
Logic "0" input voltage (IN)	V_{INL}		0.8	1.0	1.2	V

As shown in Figure 4, the 1ED44173N01B input signal section integrates a pull-down resistor. Therefore, when using an external filtering resistor between the microcontroller output and 1ED44173N01B input, pay attention to the signal voltage drop at the 1ED44173N01B input terminal. It should fulfill the logic "1" input voltage requirement. For instance, R = 1 kΩ and C = 100 pF are recommeded for the parts shown in Figure 3.

2.2 General interface circuit example

Figure 5 shows a typical application circuit of 1ED44173N01B for the interface schematic with control signals connected directly to a XMC™ µC.

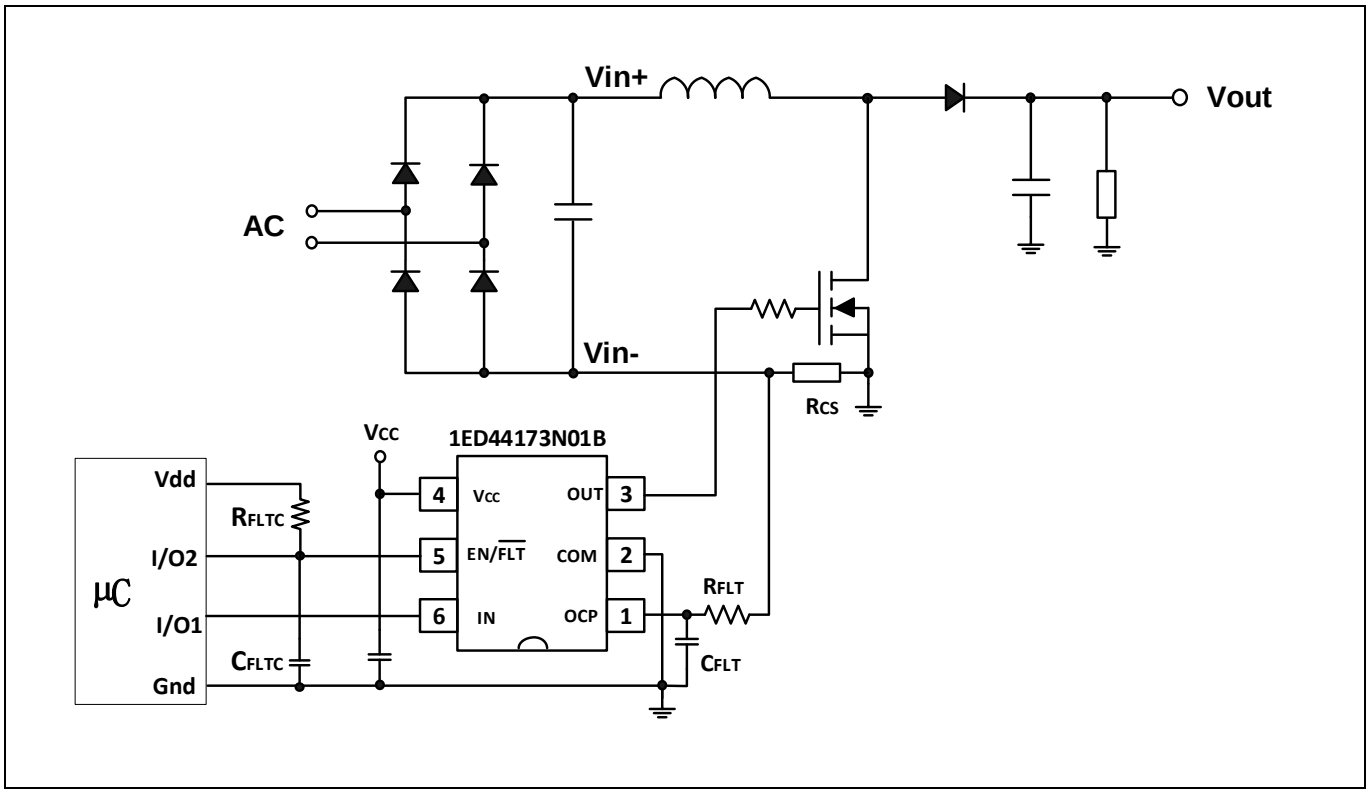

Figure 5 Application circuit example of active power factor correction (APFC) with R_{CS} for OCP

Note:

1. *The input signal is active-high configured. There is an internal pull-down resistor from the input signal line to COM. When employing an RC coupling circuit between microcontroller and 1ED44173N01B, the RC values should be properly selected so that the input signal is compatible with the 1ED44173N01B logic "1"/logic "0" input voltages.*
2. *To avoid malfunction, the wiring of the input should be as short as possible (less than 2-3 cm).*
3. *The input of 1ED44173N01B can be directly connected to the microcontroller terminal without any opto-coupler or transformer isolation.*
4. *$EN/\overline{FLT}$ output is an open-drain output. This signal line should be pulled up to the positive side of the 5 V or 3.3 V logic power supply with a pull-up resistor. The fault clear program parts are R_{FLTC} and C_{FLTC}. The wiring of the two parts should be placed as close to $EN/\overline{FLT}$ and COM pins as possible.*
5. *To prevent protection function errors, the R_{FLT} and C_{FLT} wiring between OCP and power ground should be as short as possible. C_{FLT} wiring should be placed as close to OCP and COM pins as possible.*
6. *Each capacitor should be mounted as close to the pins of the 1ED44173N01B as possible.*
7. *It is recommended to connect the ground pin of the microcontroller directly to the COM pin.*

2.3 Recommended layout pattern for overcurrent protection (OCP) & short-circuit protection (SCP) functions

As shown in Figure 6, it is recommended that the OCP filter capacitor connections to the 1ED44173N01B pins be as short as possible. It is also recommended to keep the current sense loop, which is shown in Figure 6, as small as possible for better noise immunity. External current-sensing resistors are applied to detect overcurrent. A high ESL R_{CS} or a long wiring pattern between the R_{CS} and low-side MOSFET will cause excessive surges that might damage the 1ED44173N01B and current detection components. This may also distort the sensing signals. To decrease the parasitic inductance, the wiring between the R_{CS} and emitter of low-side MOSFET should be as short as possible. **Low ESL film resistors** are strongly recommended for the **R_{CS}**.

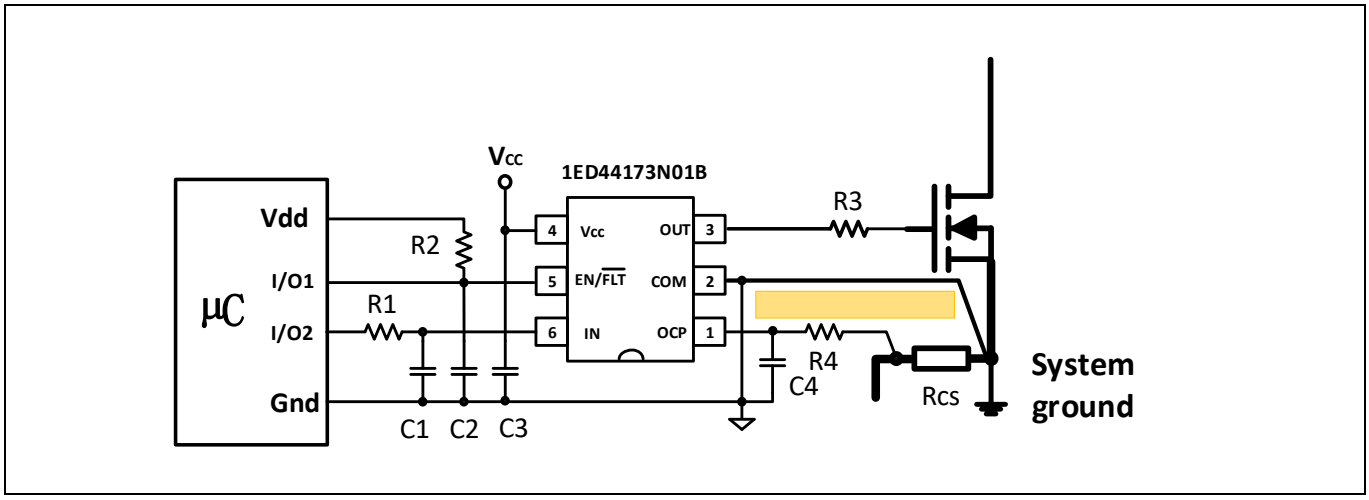

Figure 6 Recommended layout pattern for OCP & SCP function

2.4 Recommended wiring of the bypass capacitors

It is recommended to place a low ESL ceramic bypass capacitor (C3) exceeding 1 µF connected between V_{CC} and COM directly. Also connect the ground of the capacitor (C1,C2,C4) to COM. Finally, connect COM to system ground at R_{CS}. The signal ground and power ground at R_{CS} are connected at only one point. It is also recommended to keep the driver output return loop, which is shown in Figure 7, as small as possible.

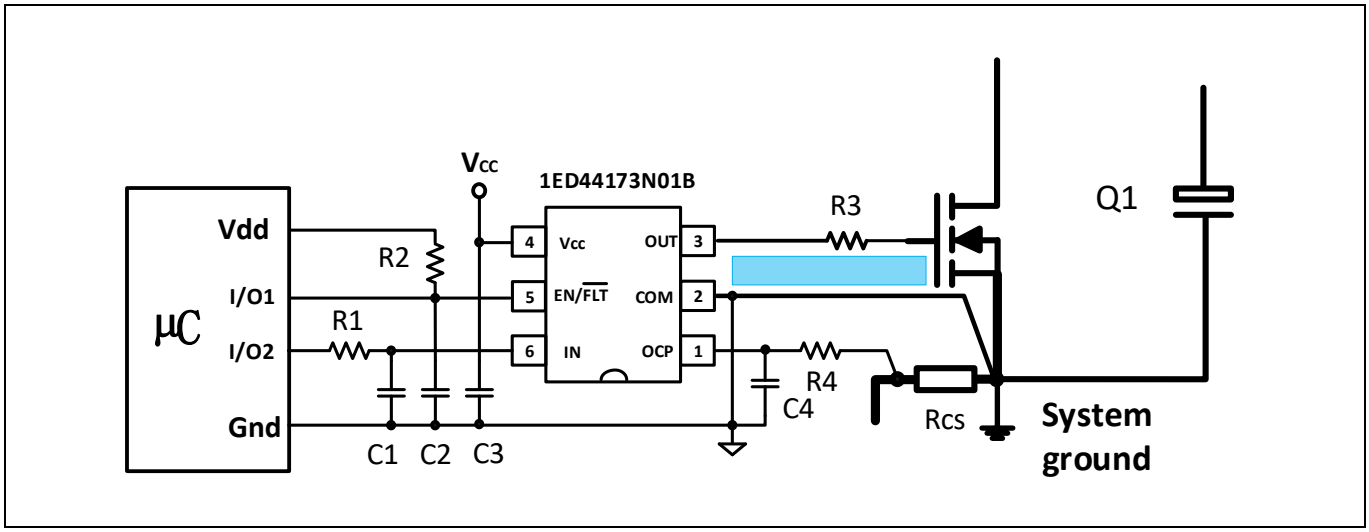

Figure 7 Recommended wiring of bypass capacitors

2.5 Recommended PCB layout

Proper PCB layout is important in high-current, fast-switching circuits to provide proper device operation and robustness of the design. Improper component and placement may cause errant switching, excessive voltage ringing or circuit latch-up.
Here is the recommended PCB layout:

1. PCB trace loop area and inductance must be minimized.
    - This is accomplished by placing the 1ED44173N01B directly at the power switch (MOSFET).
    - Placing the bypass capacitor (C3) directly at V_{CC} and COM.
    - Locating ground planes or ground return traces directly above or beneath 1ED44173N01B can reduce trace inductance.
2. A ground plane also helps as a radiated noise shield, and provides some heat sinking for power dissipated within the device.

Figure 8 is the example of the PCB layout for the schematic of Figure 7.

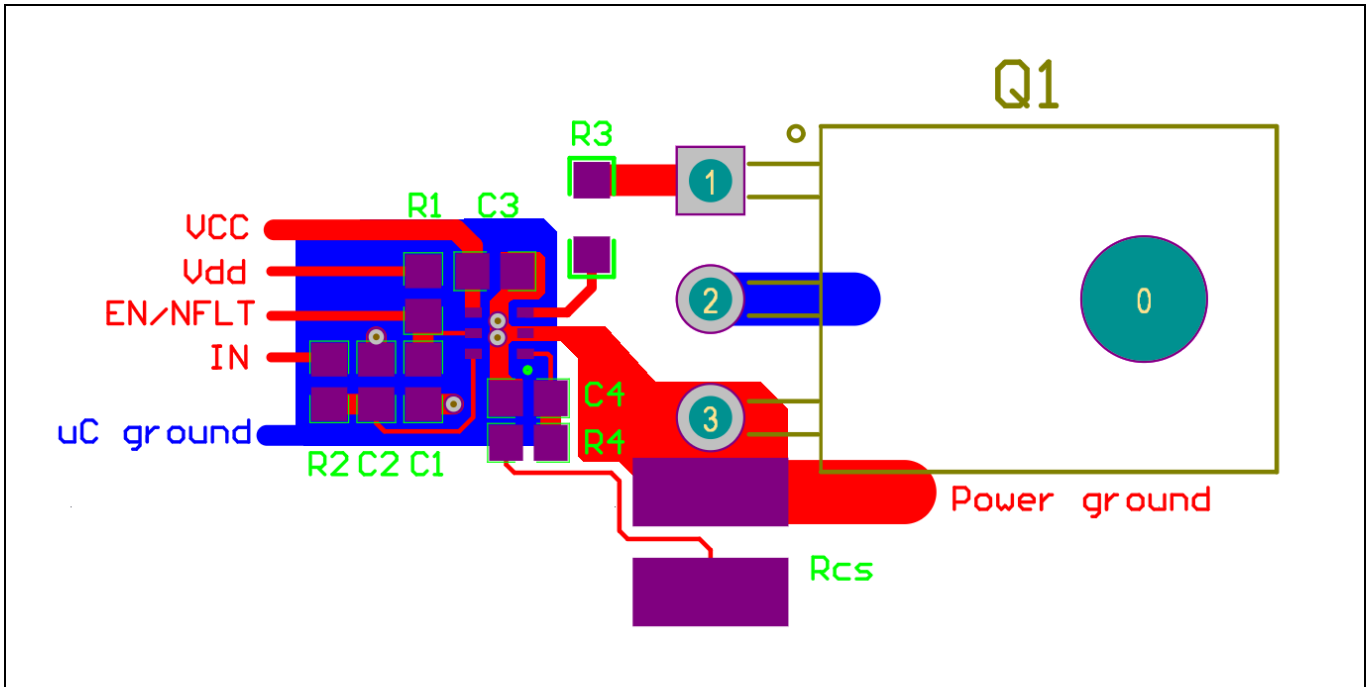

(Blue: Bottom layer, Red: Top layer)

Figure 8 Example of the PCB layout for the schematic of Figure 7

3 Protection features

3.1 Undervoltage lockout protection (UVLO)

The 1ED44173N01B has an internal UVLO protection feature on the V_{CC} pin supply circuit blocks. Table 5 shows the UVLO threshold.
Upon power-up, if the V_{CC} voltage fails to reach the V_{CCUV+} threshold, the driver cannot turn on. Additionally, if the V_{CC} voltage decreases below the V_{CCUV-} threshold and the V_{CC} bias voltage remains lower than the V_{CCUV-} threshold exceeding UVLO filter time (t_{VCCUV}) during operation, the undervoltage lockout circuitry will recognize a fault condition and shut down the drive output. The EN/$\overline{\text{FLT}}$ will then pull down to inform the controller of the fault condition, regardless of the status of the IN input pin. The t_{VCCUV} about 2 µs helps to suppress noise from the UVLO circuit, so that negative-going voltage spikes at the supply pin will avoid parasitic UVLO events.

Table 5 V_{CC} UVLO threshold voltage (T_J = 25 ℃)

Item	Symbol	Condition	Min.	Typ.	Max.	Unit
V_{CC} supply undervoltage positive-going threshold	V_{CCUV+}	Applied between V_{CC} – COM	7.4	8.0	8.6	V
V_{CC} supply undervoltage negative-going threshold	V_{CCUV-}		6.7	7.3	7.8	
V_{CC} supply undervoltage lockout hysteresis	V_{CCUVH}		—	0.7	—	

When V_{CC} is higher than V_{CCUV+} and longer than t_{FLTC}, EN/$\overline{\text{FLT}}$ becomes high and the 1ED44173N01B is enabled. (Figure 9 shows the UVLO protection.) The UVLO function is latched up. 1ED44173N01B will wait for a new input signal on IN before it activates the output stage.

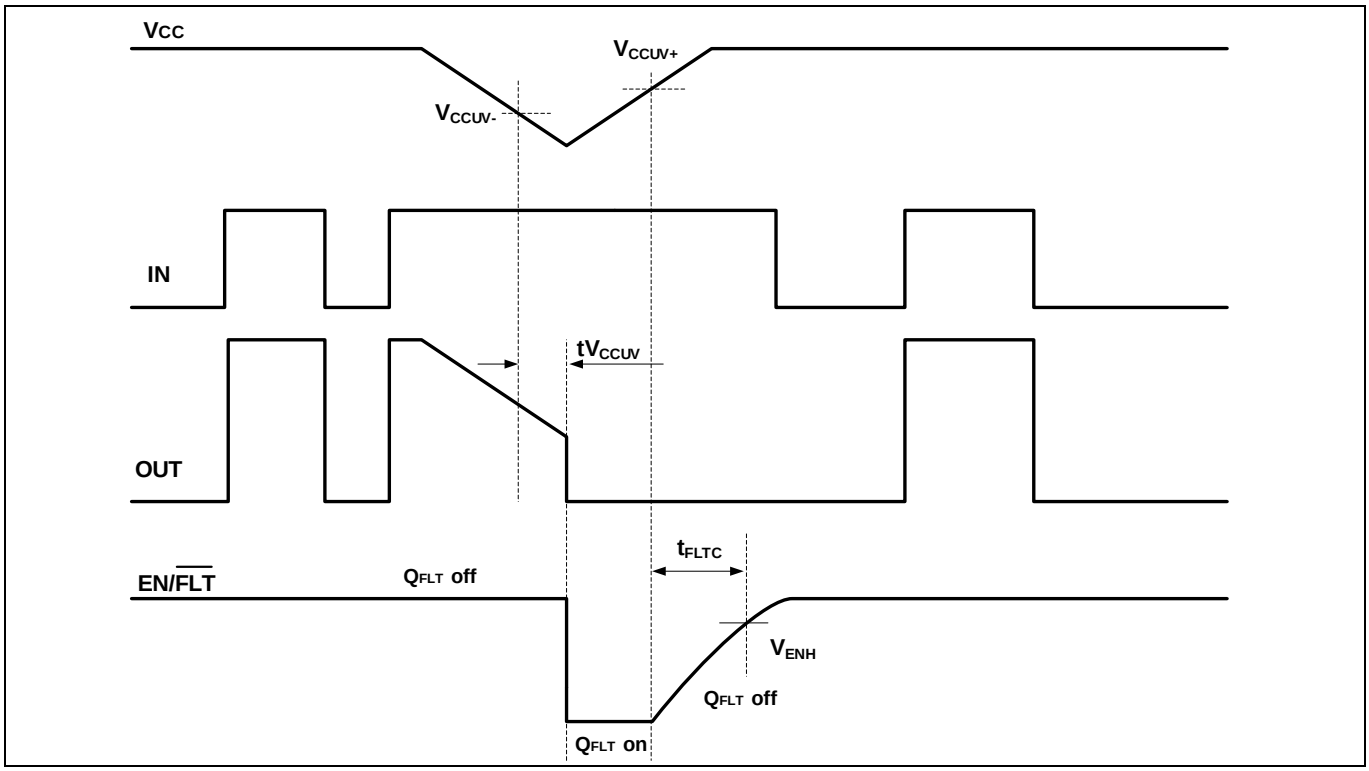

Figure 9 V_{CC} undervoltage protection

The UVLO protection ensures that the IC drives the external power devices only when the gate supply voltage is sufficient to fully enhance the power devices. Without this feature, the gates of the external power device could be driven with a low voltage, resulting in the power device conducting current while the channel impedance is high. This could result in very high conduction losses within the power device, and lead to power device failure.

The V_{CC} power for the 1ED44173N01B is normally provided by a single 15 V supply that is connected to the V_{CC} and COM terminals. The V_{CC} power supply should be well filtered with a low-impedance electrolytic capacitor and a high-frequency decoupling capacitor connected at the 1ED44173N01B pins. High-frequency noise on the supply might cause the internal control circuit to malfunction and to generate erroneous fault signals. To avoid these problems, the maximum ripple on the supply should be less than ±1 V.

3.2 Overcurrent protection (OCP)

3.2.1 Timing chart of OCP

The 1ED44173N01B has a fast overcurrent shutdown function. Its internal comparator monitors the voltage of the OCP pin. If this voltage exceeds the OCP threshold (V_{OCTH}), which is specified in Table 6, a fault signal is activated and the OUT is turned off. The tolerance of the OCP threshold is ±5%, which keeps the accurate OCP in the system design.

Table 6 Current limit threshold voltage (at V_{CC} = 15 V, T_J = 25 ℃)

Item	Symbol	Condition	Min.	Typ.	Max.	Unit
Current limit threshold voltage	V_{OCTH}	OCP – COM	-259	-246	-233	mV

Typically, the maximum short-circuit current magnitude of the MOSFET is gate-voltage dependent. A higher gate voltage results in a larger short-circuit current. Generally, the maximum overcurrent trip level is set to below 2 times the nominal rated collector current. The overcurrent protection timing chart is shown in Figure 10.

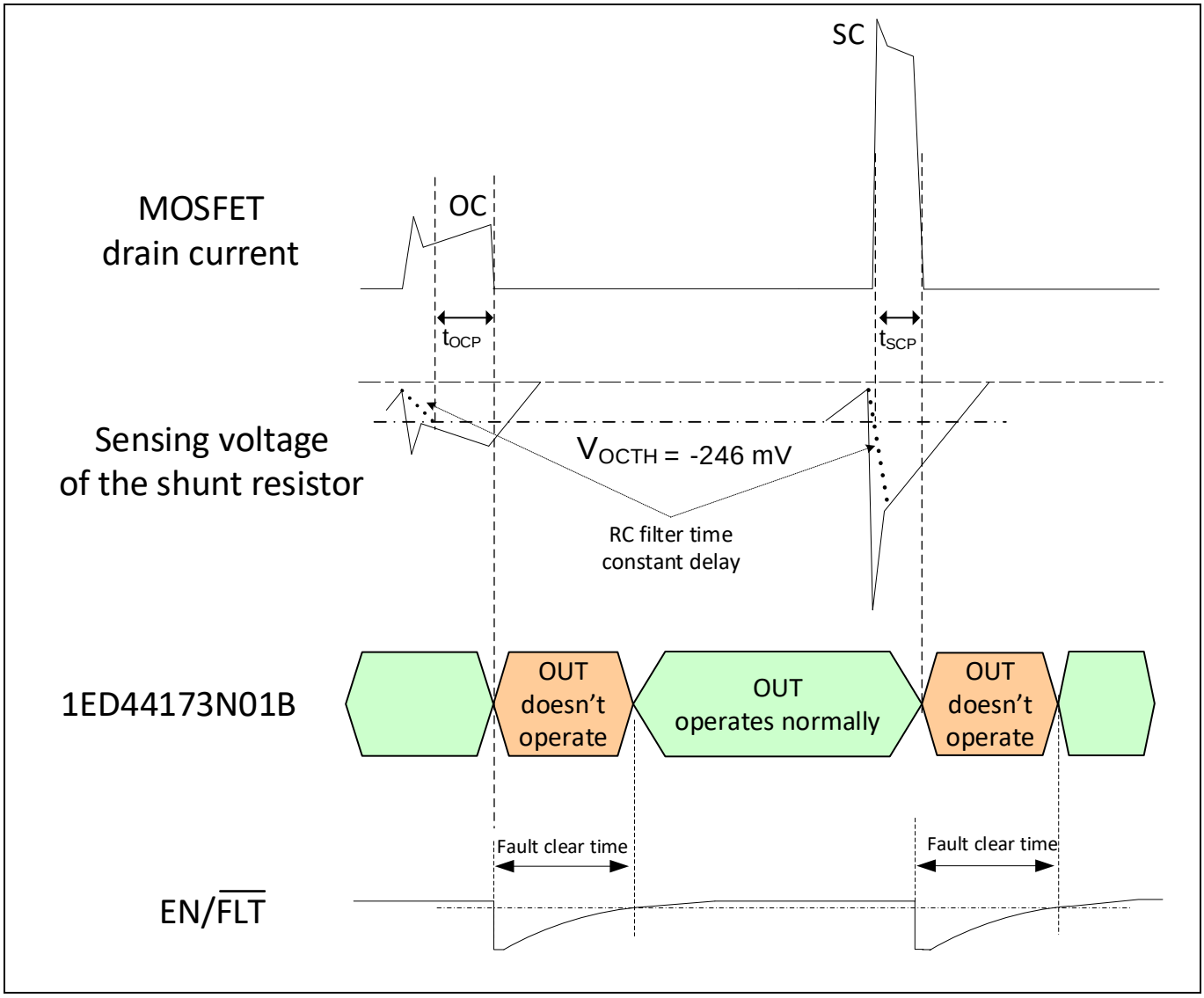

Figure 10 Timing chart of OCP

3.2.2 Selecting R_{CS}

The value of the R_{CS} is calculated by the following equation:

$$R_{CS} = \frac{V_{OCTH}}{I_{OC}} \quad (1)$$

Where I_{OC} is the current of the overcurrent (OC) detection level.

The maximum value of the OC protection level should be set lower than the repetitive peak collector current in the datasheet considering the tolerance of R_{CS}.

For example, if the OCP is 25 A, the recommended value of the R_{CS} is calculated as

$$R_{CS(min)} = \frac{0.25}{25} = 10\ m\Omega$$

For the power rating of the R_{CS}, the following list should be considered:

- Maximum load current (Irms)
- R_{CS} value at Tc = 25 °C
- Power derating ratio of R_{CS} at T_C = 100 °C according to the manufacturer's datasheet
- Safety margin

The R_{CS} power rating is calculated by the following equation:

$$P_{SC} = \frac{I_{rms}^2 \times R_{SC} \times margin}{derating\ ratio} \quad (2)$$

For example, If R_{SC} = 10 mΩ:

- Max. load current: 4 A (rms)
- Power derating ratio of R_{CS} at T_C = 100 °C : 80%
- Safety margin : 50%

$$P_{SC} = \frac{4^2 x\ 0.01\ x\ 1.5}{0.8} = 0.3\ W$$

A proper power rating of R_{CS} is over 0.3 W, e.g. 0.5 W.

A proper resistance and power rating higher than the minimum value should be chosen considering the OCP level required in the application.

3.2.3 OCP delay time

The internal OCP blanking time ($t_{BLK,}$ Table 7 shows the specification) is necessary in the OC sensing circuit to prevent malfunction of the OCP caused by noise. If the internal blanking time is not sufficient to suppress the noise, an additional external RC filter is necessary. The RC time constant is determined by considering the noise duration and the short-circuit withstand time capability of the MOSFET.

The sensing voltage on R_{CS} is applied to the OCP pin of 1ED44173N01B via the RC filter. The filter delay time (t_{FILTER}) that the input voltage of OCP pin decreases to the OCP minus threshold voltage (V_{OCTH} = - 246 mV) is caused by RC filter time constant.

In addition there is a shutdown propagation delay of OCP (t_{OCPDEL}, the time from OCP happening to output shutdown). Please refer to Table 8.

Table 7 Specification of OCP blanking time

Item	Min.	Typ.	Max.	Unit
Overcurrent protection blanking time t_{BLK}	30	50	80	ns

Table 8 Specification of OCP to output shutdown propagation delay

Item	Min.	Typ.	Max.	Unit
OCP to output shutdown propagation delay t_{OCPDEL}	—	97	140	ns

Therefore, the total delay time from OCP threshold (V_{OCTH}) to the shutdown of the MOSFET becomes:

$$t_{TOTAL} = t_{FILTER} + t_{OCPDEL} \quad (3)$$

Shutdown propagation delay is inversely proportional to the current rating, therefore the t_{TOTAL} is reduced at higher current conditions. The total delay must be less than the short-circuit withstanding time (t_{SC}) of the MOSFET in the datasheet. If the t_{SC} = 1 µs, the RC time constant should be set in the range of 0.5 µs. Recommended values for the filter components are R = 470 Ω and C = 1 nF.

3.3 Fault output circuit and fault clear time setup

The 1ED44173N01B provides an integrated fault reporting output and an adjustable fault clear timer. There are two situations that would cause the driver to report a fault via the EN/$\overline{FLT}$ pin. The first is an undervoltage condition of V_{CC} and the second is if the OCP pin recognizes a fault. Once the fault condition occurs, the EN/$\overline{FLT}$ pin is internally pulled to COM. The EN/$\overline{FLT}$ output stays in the low state until the fault condition has been removed and the internal pull down MOSFET Q_{FLT} turns off, then the voltage on the EN/$\overline{FLT}$ pin is charged up with internal and external pull-up voltage.

The length of the fault clear time period (t_{FLTC}) is determined by exponential charging characteristics of the capacitor where the time constant is set by R_{FLTC} and C_{FLTC}. Figure 11 and Figure 5 show that R_{FLTC} is connected between the external supply (V_{dd} = 3.3 V) and the EN/$\overline{FLT}$ pin, while C_{FLTC} is placed between the EN/$\overline{FLT}$ and COM pins. Actually the EN/$\overline{FLT}$ pin is pulled up to 3.3 V with a 2.15 MΩ pull-up resistor internally.

If the V_{dd}=3.3 V, the length of the fault clear time period can be determined by using the formula below.

$$t_{FLTC} = -\left(\frac{R_{FLTC} \times 2.15M}{R_{FLTC} + 2.15M}\right) \times C_{FLTC} \times \ln\left(1 - \frac{V_{ENH}}{V_{dd}}\right) \quad (4)$$

Where V_{ENH} is fault clear threshold voltage (typical 2.1 V).

The sample of t_{FLTC} setup:

If C_{FLTC} = 150 pF, R_{FLTC} = 1 MΩ, V_{dd} = 3.3 V, then

$$t_{FLTC} = -\left(\frac{1M \times 2.15M}{1M + 2.15M}\right) \times 150pF \times \ln\left(1 - \frac{2.1V}{3.3V}\right) = 103us$$

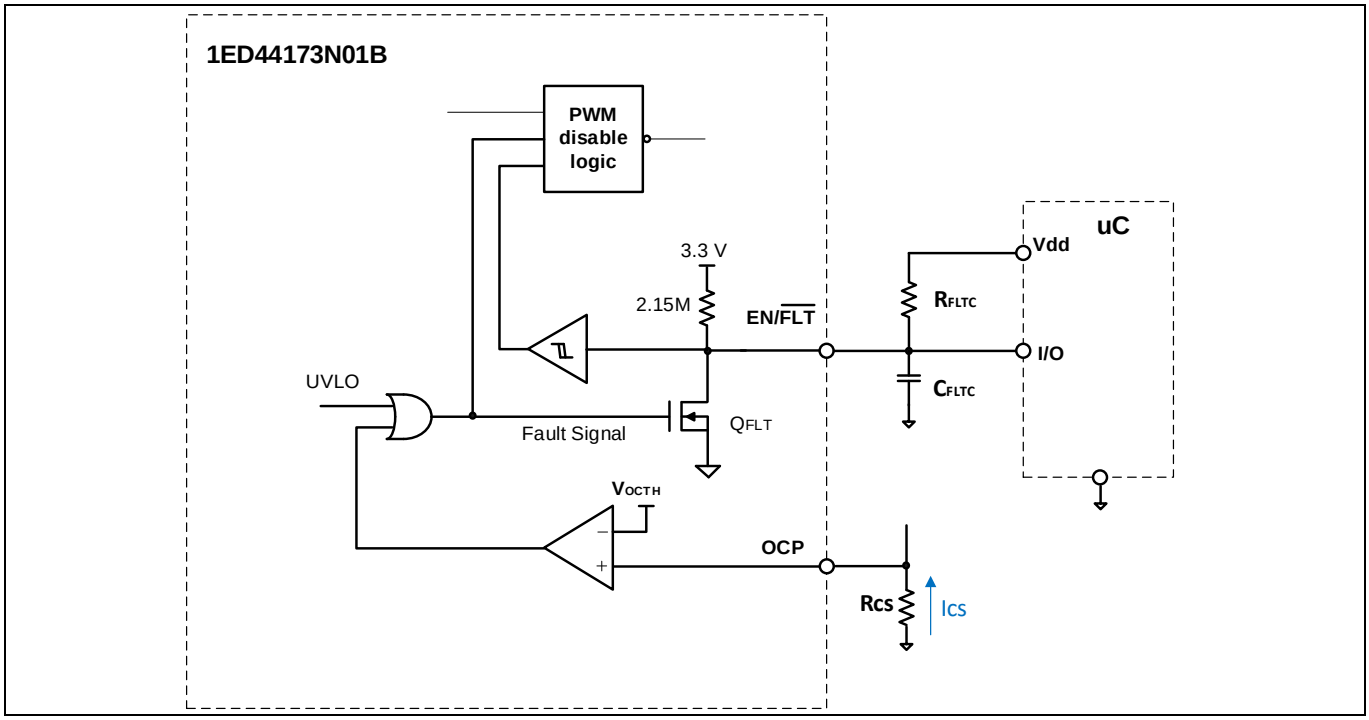

Figure 11 Diagram of the fault output circuit and fault clear time setup

If the C_{FLTC} is not connected, and R_{FLTC} is pulled up to V_{CC} with 10 kΩ resistor, the gate driver can implement overcrrent protection cycle by cycle. The feature of OCP with cycle by cycle can limit the peak inductor current in low-line voltage and prevent the saturation of the PFC inductor.

3.4 Enable input circuit

1ED44173N01B provides an enable functionality that allows you to shut down or to enable the output. When EN/$\overline{\text{FLT}}$ is pulled up (the enable voltage is higher than V_{ENH}), the output is able to operate normally, pulling EN/$\overline{\text{FLT}}$ low (the enable voltage is lower than V_{ENL}), the output is disabled. The enable function is latched up. After a disable event, 1ED44173N01B will wait for a new input signal on IN before it activates the output stage. See the threshold voltage of V_{ENH} and V_{ENL} in Table 9 and Figure 12.

Table 9 EN/$\overline{\text{FLT}}$ input threshold voltage (at V_{CC} = 15 V, T_J = 25 ℃)

Item	Symbol	Condition	Min.	Typ.	Max.	Unit
Logic "1" input voltage (EN/$\overline{\text{FLT}}$)	V_{ENH}	EN/$\overline{\text{FLT}}$ – COM	1.9	2.1	2.3	V
Logic "0" input voltage (EN/$\overline{\text{FLT}}$)	V_{ENL}		0.8	1	1.2	V

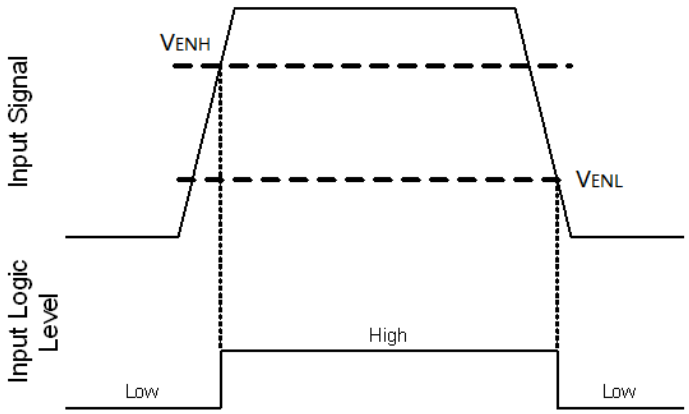

Figure 12 Enable input thresholds

The relationships between the input (IN), output (OUT) and enable (EN/$\overline{\text{FLT}}$) signals of the 1ED44173N01B are illustrated below in Figure 13.

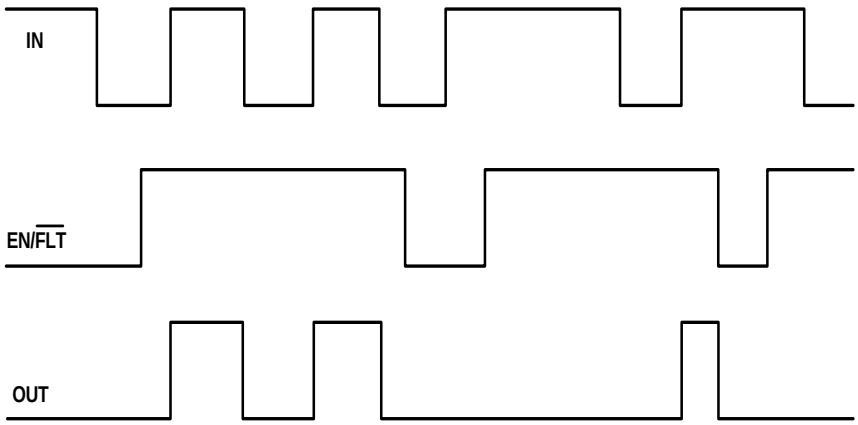

Figure 13 Input/output/enable pins timing diagram

From Figure 14, we can see the definitions of the timing parameter (t_{DISA}) associated with this device. t_{DISA} is the delay time from the enable signal pulling down to output shutting down. Please refer to Table 10.

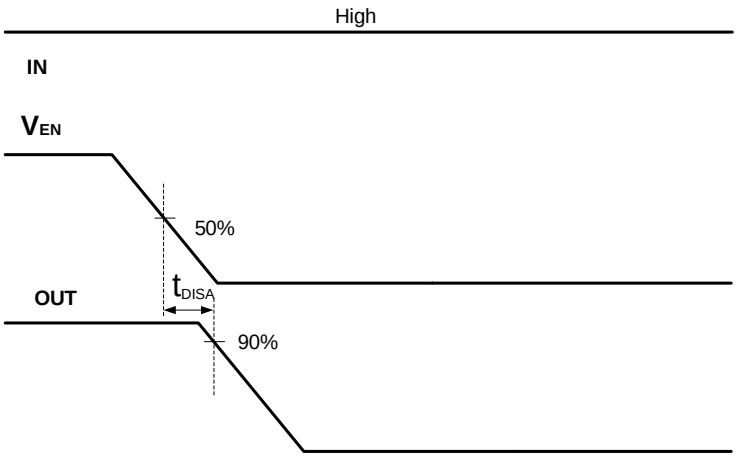

Figure 14 EN pin switching time waveform

Table 10 Specification of disable delay time

Item	Min.	Typ.	Max.	Unit
Enable propagation delay t_{DISA}	27	34	45	ns

4 Driving capability

4.1 I_{O+} and I_{O-}

The 1ED44173N01B provides minimum 2 A source or sink-driving capability (see Table 11) which is large enough to drive most discrete PFC switches, e.g. the MOSFET.

Table 11 I_{O+} and I_{O-} (at V_{CC} = 15 V, T_J = 25 ℃)

Item	Symbol	Condition	Min.	Typ.	Max.	Unit
Output sourcing short-circuit pulsed current	I_{O+}	V_O = 0 V PW ≤ 2 µs	2	2.6	—	A
Output sinking short-circuit pulsed current	I_{O-}	V_O = 15 V PW ≤ 2 µs	2	2.6	—	

5 EVAL-1ED44175N01B adapter board

A small, dual purpose adapter board (EVAL-1ED44175N01B, see Figure 15) is available for testing the 1ED44173N01B inside an actual switched-mode application.

The 1ED44173N01B MOSFET low-side driver is pin-to-pin compatible with the 1ED44175N01B low-side IGBT driver. The board includes a footprint that can support either the 1ED44173N01B or 1ED44175N01B SOT-236 low-side drivers with OCP and enable/fault output, TO-247 footprint of gate and emitter for IGBT or gate and source for MOSFET, and other SMD components. The adapter board can be easily connected to an existing switched-mode power circuit for fast in-circuit evaluation.

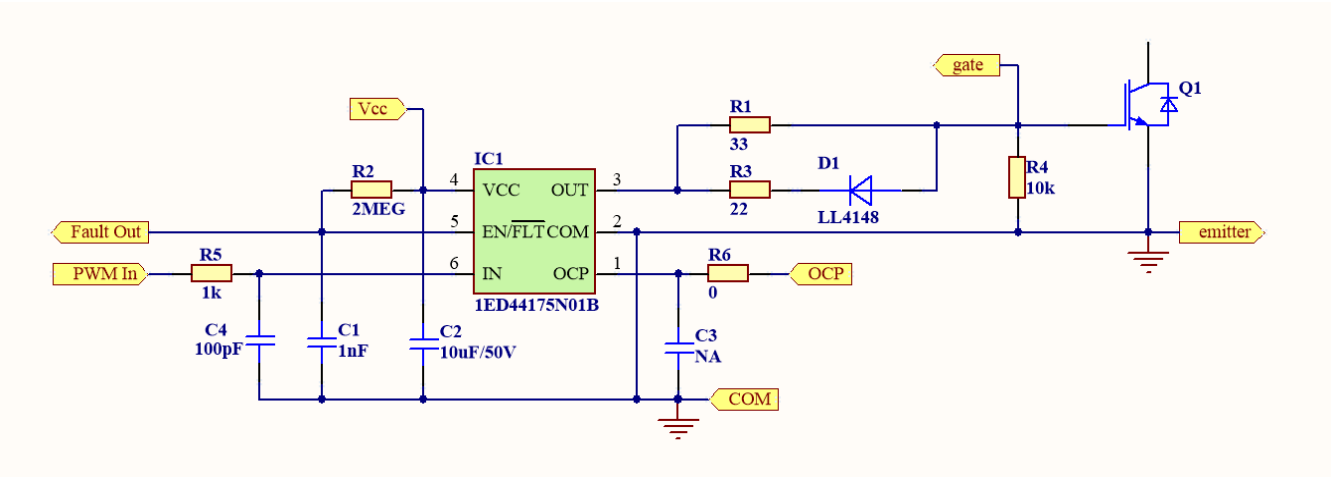

Schematic (1ED44175N01B can be replaced with 1ED44173N01B)

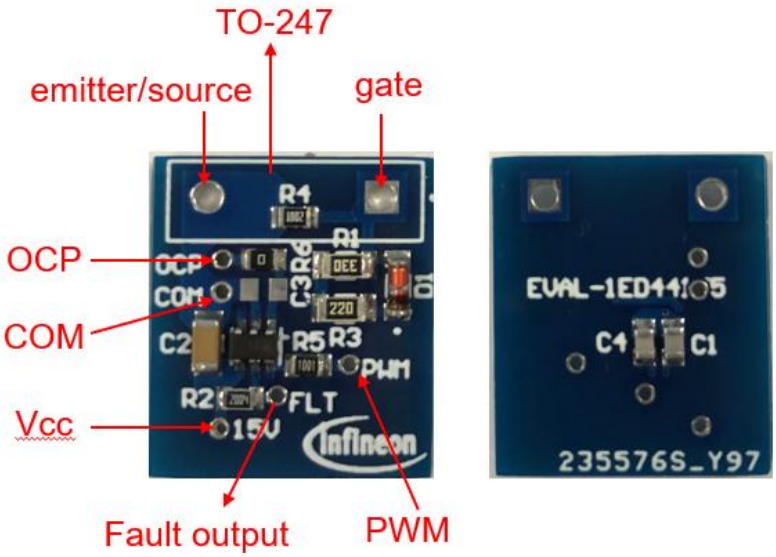

Board profile

Figure 15 EVAL-1ED44175 adapter board

5.1 The evaluation of 1ED44173N01B on the PFC board

5.1.1 The connection between the adapter board and PFC board

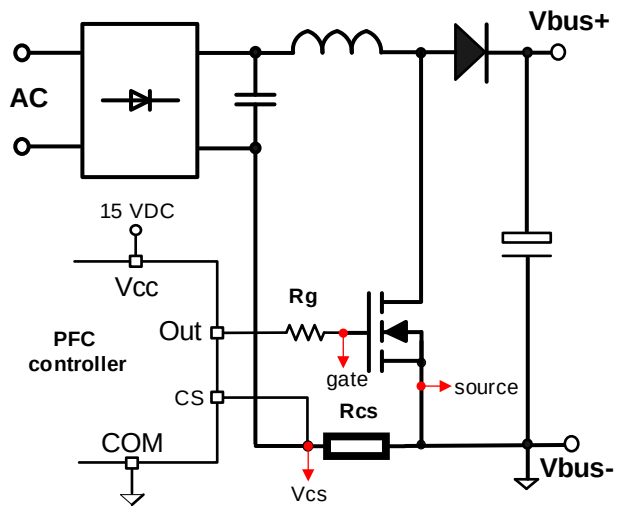

Block diagram of the PFC board

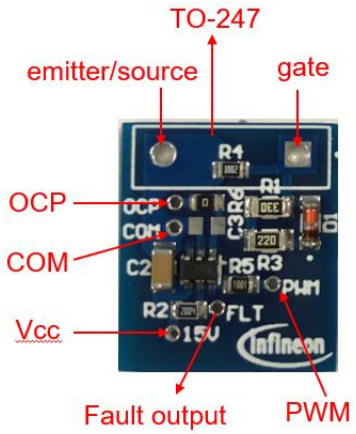

Adapter board

- Disconnect R_g on the PFC board
- Having the following connections between PFC board and adapter board:

PFC board	Adapter board
15 V_{DC}	V_{CC}
COM	COM
V_{CS}	OCP
Out	PWM
gate	gate
source	emitter/source

Top

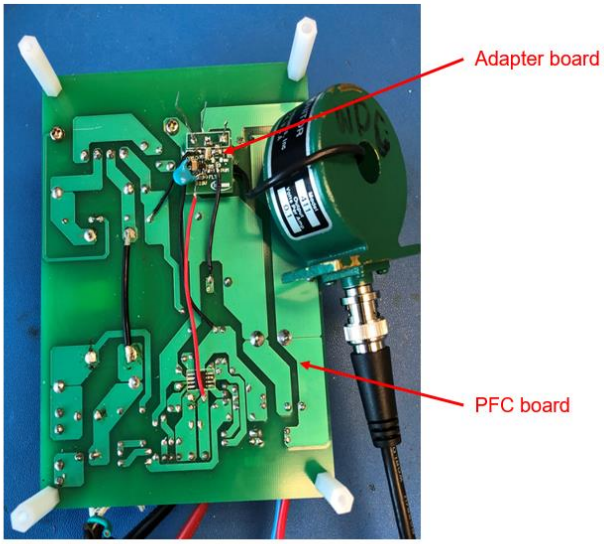

Bottom

Figure 16 Connection between PFC board and adapter board

5.1.2 Normal operation

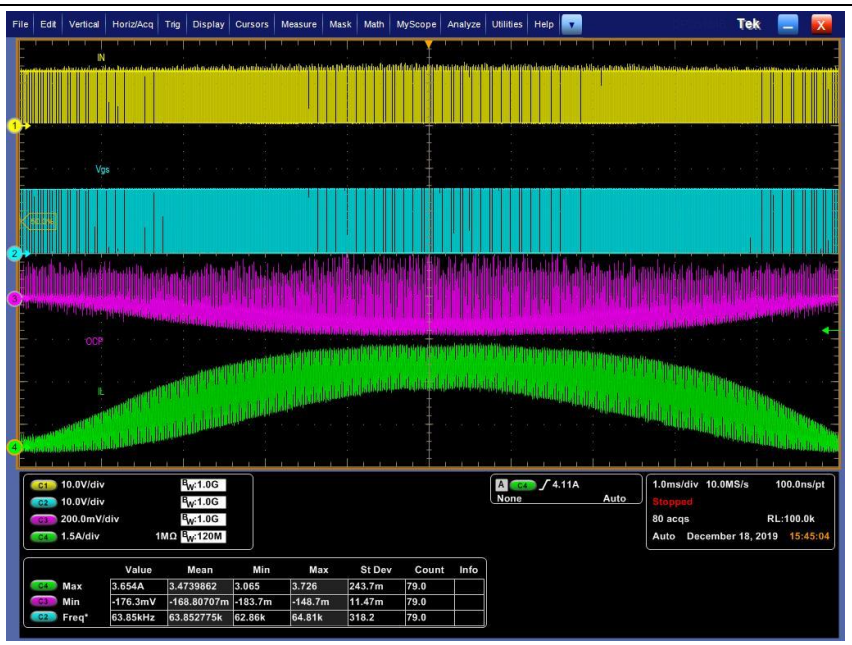

- Channel 1 (yellow): PWM input voltage
- Channel 2 (blue): Gate voltage of PFC MOSFET
- Channel 3 (purple): Voltage of OCP pin
- Channel 4 (green): Current of PFC inductor

Working condition:

- PFC inductor = 750 uH, R_{cs} = 0.05Ω
- PFC MOSFET : IPP60R199CP
- Frequency = 64 kHz, V_{in} = 220 V_{ac}, V_{bus} = 400 V
- P_{out} = 400 W

Figure 17 Normal operation

5.1.3 OCP

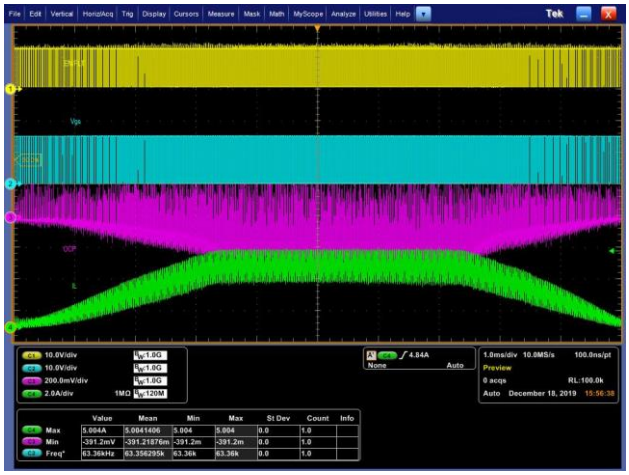

Zoom out

Zoom in

- V_{in} = 175 V_{ac}, V_{bus} = 400 V, P_{out} = 500 W, (R2 = 10 kΩ, C1: not connected)
- Cycle by cycle OCP

Figure 18 OCP

5.1.4 Short PFC inductor test

- Channel 1 (yellow): PWM voltage
- Channel 2 (blue): Gate voltage of PFC MOSFET
- Channel 3 (purple): Voltage of OCP
- Channel 4 (green): Current of the cable to short the PFC indcutor

- PFC MOSFET: IPP60R199CP
- Rg = 68 Ω, R_{CS} = 0.05 Ω
- OCP pin: with external filter (R6 = 330 Ω, C3 = 1 nF)
- Vin = 400Vdc
- Short PFC inductor test with 125 mm cable
- The protection time is less than **200 ns** (fast enough to protect most power MOSFETs, including SiC MOSFETs)

Figure 19 Short PFC inductor test

6 Recommended related products

The 1ED44173N01B can be used to drive up to 75 A/650 V CoolMOS™ from Infineon at a frequency of up to 100 kHz for PFC applications. The power rating is up to 3 kW. If the higher frequency is required for the application, Infineon's CoolSiC™ SiC MOSFET is a good choice. Some parts of the CoolMOS™, CoolSiC™, rapid switching emitter-controlled diode and silicon carbide CoolSiC™ Schottky diode from Infineon in PFC applications are recommended in Table 12,Table 13, and Table 14.

Table 12 Infineon's CoolMOS™ C7 superjunction MOSFET

Part Number	Voltage level	Package	RDS (on)	ID @ 25°C max	ID, pulse @ 25°C max
IPW(Z)65R019C7	650 V	PG-TO 247-3(4)	19 mΩ	75 A	496 A
IPW(Z)65R045C7	650 V	PG-TO 247-3(4)	45 mΩ	46 A	212 A
IPW(Z)65R065C7	650 V	PG-TO 247-3(4)	65 mΩ	33 A	145 A
IPW(Z)65R095C7	650 V	PG-TO 247-3(4)	95 mΩ	24 A	100 A
IPW65R125C7	650 V	PG-TO 247	125 mΩ	18 A	75 A
IPW65R190C7	650 V	PG-TO 247	190 mΩ	13 A	49 A

For more options visit www.infineon.com/MOSFET

Table 13 Infineon's CoolSiC™ SiC MOSFETs

Part Number	Voltage level	Package	RDS (on)	ID @ 25°C max	ID, pulse @ 25°C max
IMW(ZA)65R027M1H	650 V	PG-TO 247-3(4)	27 mΩ	47(59) A	184 A
IMW(ZA)65R048M1H	650 V	PG-TO 247-3(4)	48 mΩ	39 A	100 A
IMW(ZA)65R072M1H	650 V	PG-TO 247-3(4)	72 mΩ	26(28) A	69 A
IMW(ZA)65R107M1H	650 V	PG-TO 247-3(4)	107 mΩ	20 A	48 A

For more options visit https://www.infineon.com/SiC MOSFET

Table 14 Infineons RAPID 1 diode

Part Number	Voltage level	Package	VF @ 25°C max	IF @ 100°C max	IF @ 25°C max
IDW30E65D1	650 V	PG-TO247-3	1.7 V (IF=30 A)	30 A	60 A
IDW40E65D1(E)	650 V	PG-TO247-3(-AI)	1.7 V (IF=40 A)	40 A	80 A
IDW60C65D1	650 V	PG-TO247-3	1.7 V (IF=30 A)	30 A	60 A
IDW80C65D1	650 V	PG-TO247-3	1.7 V (IF=40 A)	40 A	80 A

For more options visit www.infineon.com/rapiddiodes

Table 15 Infineon's silicon carbide CoolSiC™ Schottky diode

Part Number	Voltage level	Package	VF @ T_j=25°C max	IF @ T_C < 120°C	$I_{F,SM}$ @ T_C=25°C t_p=10 ms max
IDW20G65C5	650 V	TO-247	1.7 V (IF=20 A)	20 A	103
IDW32G65C5B	650 V	TO-247	1.7 V (IF=16 A)	2 x 16 A	95 A
IDW40G65C5B	650 V	TO-247	1.7 V (IF=20 A)	2 x 20 A	103 A
IDW30G65C5	650 V	TO-247	1.7 V (IF=30 A)	30 A (T_C < 115°C)	165 A
IDW40G65C5	650 V	TO-247	1.7 V (IF=40 A)	40 A (T_C < 110°C)	182 A

For more options visit CoolSiC™ Schottky Diode

7 References

1. Datasheet of 1ED44173N01B, Rev 1.0
2. 1ED44175N01B - Low-side IGBT driver with over-current protection and fault/enable - Technical description

8 Revision history

Major changes since the last revision

Version number	Revision date	Revision description
1.0	2020-04-22	Initial release
1.1	2020-06-16	Add OPN of EVAL-1ED44173N01B on first page
1.2	2024-01-16	Page 21 figure 15 and page 22 figure 16, Correct the gate and emitter/source pins of the evaluation board. On page 25, chapter 6, Add missing table.

Trademarks
All referenced product or service names and trademarks are the property of their respective owners.

Edition 2024-01-16

Published by

Infineon Technologies AG

81726 Munich, Germany

© 2024 Infineon Technologies AG.
All Rights Reserved.

Do you have a question about this document?

Email: erratum@infineon.com

Document reference

AN2020-09

IMPORTANT NOTICE
The information contained in this application note is given as a hint for the implementation of the product only and shall in no event be regarded as a description or warranty of a certain functionality, condition or quality of the product. Before implementation of the product, the recipient of this application note must verify any function and other technical information given herein in the real application. Infineon Technologies hereby disclaims any and all warranties and liabilities of any kind (including without limitation warranties of non-infringement of intellectual property rights of any third party) with respect to any and all information given in this application note.

The data contained in this document is exclusively intended for technically trained staff. It is the responsibility of customer's technical departments to evaluate the suitability of the product for the intended application and the completeness of the product information given in this document with respect to such application.

For further information on the product, technology, delivery terms and conditions and prices please contact your nearest Infineon Technologies office (**www.infineon.com**).

Please note that this product is not qualified according to the AEC Q100 or AEC Q101 documents of the Automotive Electronics Council.

WARNINGS
Due to technical requirements products may contain dangerous substances. For information on the types in question please contact your nearest Infineon Technologies office.

Except as otherwise explicitly approved by Infineon Technologies in a written document signed by authorized representatives of Infineon Technologies, Infineon Technologies' products may not be used in any applications where a failure of the product or any consequences of the use thereof can reasonably be expected to result in personal injury.