RAMXEED

DS501-00087-2v0-E

Memory FeRAM

RAMXEED ULTIMATE

512K (64 K × 8) Bit I²C

MB85RC512TY(AEC-Q100 Compliant)

■ DESCRIPTION

The MB85RC512TY is an FeRAM (Ferroelectric Random Access Memory) chip in a configuration of 65,536 words × 8 bits, using the ferroelectric process and silicon gate CMOS process technologies for forming the nonvolatile memory cells.

Unlike SRAM, the MB85RC512TY is able to retain data without using a data backup battery.

The read/write endurance of the nonvolatile memory cells used for the MB85RC512TY has improved to be at least 10^{13} cycles, significantly outperforming other nonvolatile memory products in the number.

The MB85RC512TY does not need a polling sequence after writing to the memory such as the case of Flash memory or E^2PROM.

■ FEATURES

- Bit configuration : 65,536 words × 8 bits
- Two-wire serial interface : Fully controllable by two ports: serial clock (SCL) and serial data (SDA).
- Operating frequency : 3.4 MHz (Max @HIGH SPEED MODE)
  1 MHz (Max @FAST MODE PLUS)
- Read/write endurance : 10^{13} times / byte
- Data retention : 193.9 years (+ 85 °C),
  40.7 years (+ 105 °C),
  10.1 years (+ 125 °C)
- Operating power supply voltage: 1.8 V to 3.6 V
- Low-power consumption : Operating power supply current 0.24 mA (Typ @3.4 MHz)
  0.4 mA (Max @3.4 MHz)
  Standby current 10 μA (Typ)
  Sleep current 0.20 μA (Typ)
- Operation ambient temperature range
  : − 40 °C to + 125 °C
- Package : 8-pin plastic SOP (150mil)
  8-pin plastic DFN (5mm × 6mm)
  RoHS compliant

Fujitsu Semiconductor Memory Solutions Limited has changed its name to RAMXEED Limited. RAMXEED Limited will continue to offer and support existing products while maintaining Fujitsu's part number unchanged.

Copyright 2026.07 RAMXEED LIMITED

■ PIN ASSIGNMENT

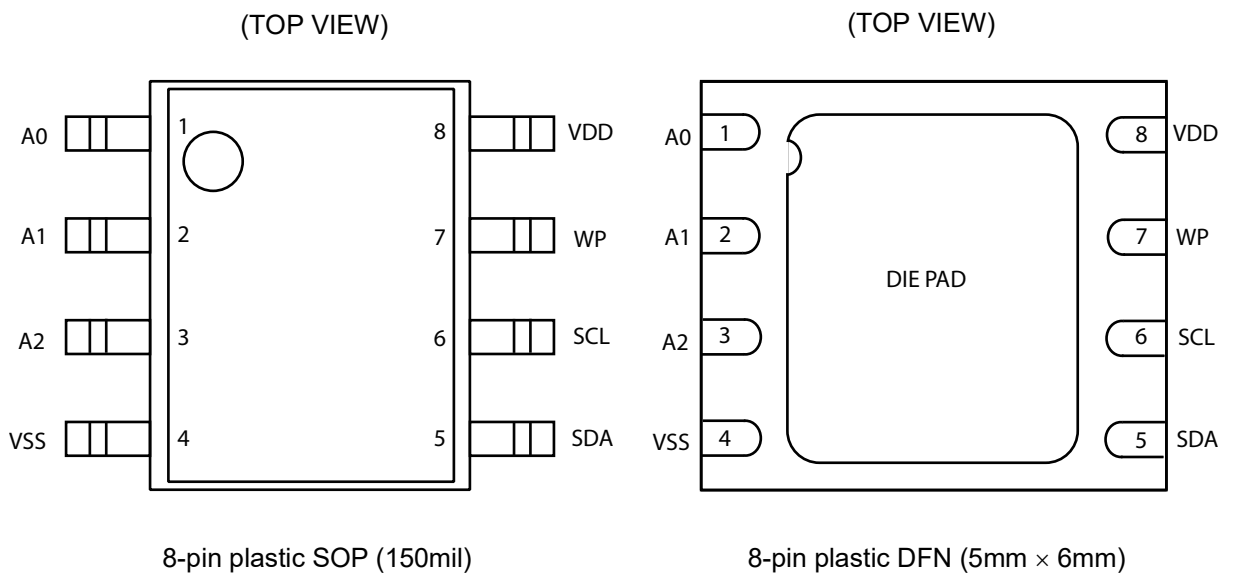

■ PIN FUNCTIONAL DESCRIPTIONS

Pin Number	Pin Name	Functional Description
1 to 3	A0 to A2	Device Address pins The MB85RC512TY can be connected to the same data bus up to 8 devices. Device addresses are used in order to identify each of these devices. Connect these pins to VDD pin or VSS pin externally. Only if the combination of VDD and VSS pins matches Device Address Code inputted from the SDA pin, the device operates. In the open pin state, A0, A1 and A2 pins are internally pulled-down and recognized as the "L" level.
4	VSS	Ground pin
5	SDA	Serial Data I/O pin This is an I/O pin which performs bidirectional communication for both memory address and writing/reading data. It is possible to connect multiple devices. It is an open drain output, so a pull-up resistor is required to be connected to the external circuit.
6	SCL	Serial Clock pin This is a clock input pin for input/output serial data. Data is sampled on the rising edge of the clock and output on the falling edge.
7	WP	Write Protect pin When the Write Protect pin is the “H” level, the writing operation is disabled. When the Write Protect pin is the “L” level, the entire memory region can be overwritten. The reading operation is always enabled regardless of the Write Protect pin input level. The Write Protect pin is internally pulled down to VSS pin, and that is recognized as the “L” level (write enabled) when the pin is the open state.
8	VDD	Supply Voltage pin

■ BLOCK DIAGRAM

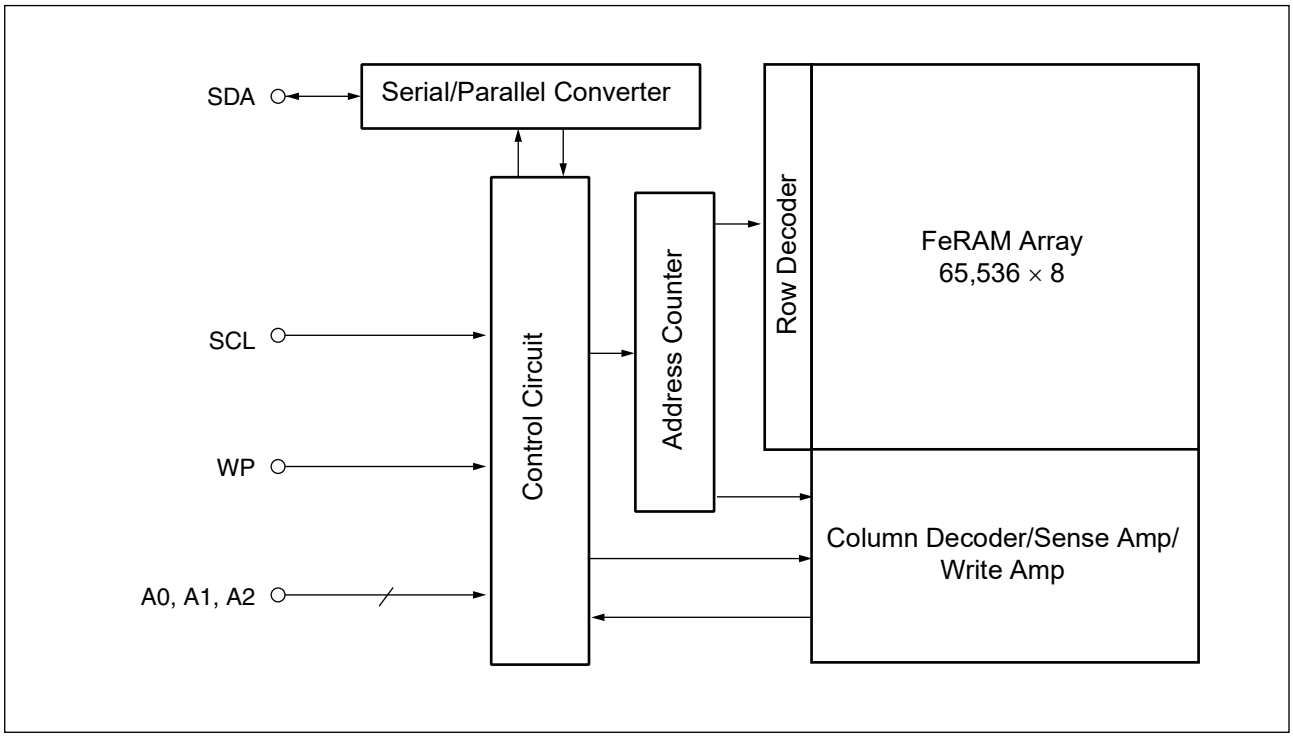

■ I²C (Inter-Integrated Circuit)

The MB85RC512TY has the two-wire serial interface; the I²C bus, and operates as a slave device. The I²C bus defines communication roles of “master” and “slave” devices, with the master side holding the authority to initiate control. Furthermore, the I²C bus connection is possible where a single master device is connected to multiple slave devices in a party-line configuration. In this case, it is necessary to assign a unique device address to the slave device, the master side starts communication after specifying the slave to communicate by addresses.

- **I²C Interface System Configuration Example**

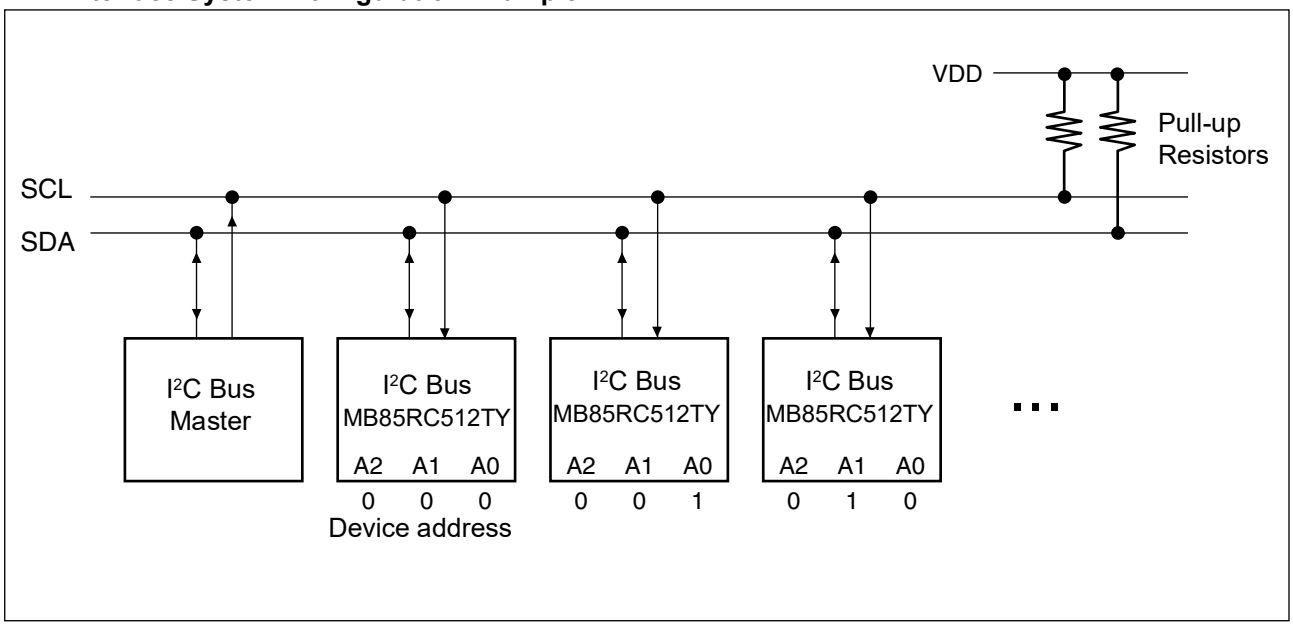

■ I²C COMMUNICATION PROTOCOL

The I²C bus is a two wire serial interface that uses a bidirectional data bus (SDA) and serial clock (SCL). A data transfer can only be initiated by the master, which will also provide the serial clock for synchronization. The SDA signal should change while the SCL is the “L” level. However, as an exception, when starting and stopping communication sequence, the SDA is allowed to change while the SCL is the “H” level.

- Start Condition

To start read or write operations by the I²C bus, change the SDA input from the “H” level to the “L” level while the SCL input is in the “H” level.

- Stop Condition

To stop the I²C bus communication, change the SDA input from the “L” level to the “H” level while the SCL input is in the “H” level. In the reading operation, inputting the stop condition finishes reading and enters the standby state. In the writing operation, inputting the stop condition finishes inputting the rewrite data and enters the standby state.

• Start Condition, Stop Condition

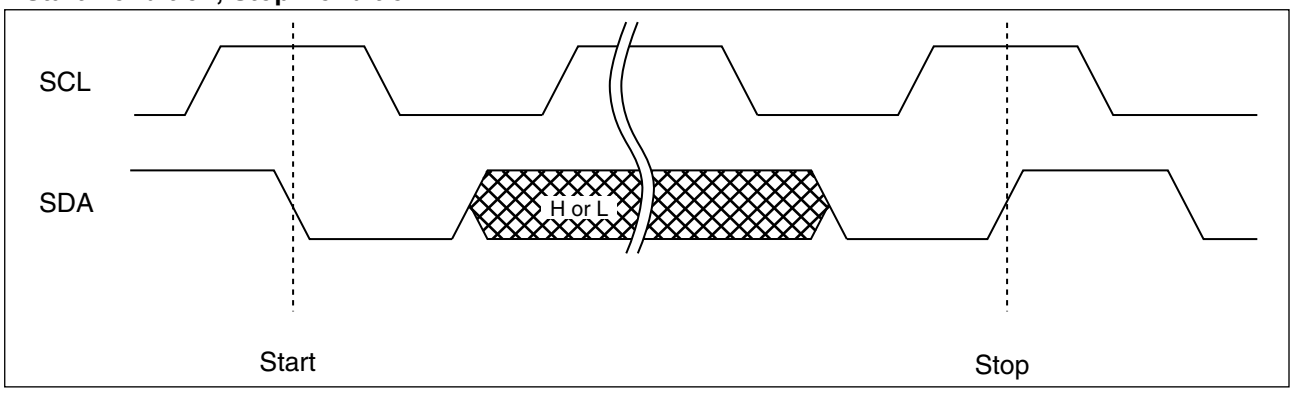

Note : At the write operation, the FeRAM device does not need the programming wait time (t_{WC}) after issuing the Stop Condition.

■ ACKNOWLEDGE (ACK)

In the I²C bus, serial data including memory address or memory information is sent and received in units of 8 bits. The acknowledge signal indicates that every 8 bits of the data is successfully sent and received. The receiver side usually outputs the “L” level every time on the 9th SCL clock after each 8 bits are successfully transmitted and received. On the transmitter side, the bus is temporarily released to Hi-Z every time on this 9th clock to allow the acknowledge signal to be received and checked. During this Hi-Z released period, the receiver side pulls the SDA line down to indicate the “L” level that the previous 8 bits communication is successfully received.

In case the slave side receives Stop condition before sending or receiving the ACK “L” level, the slave side stops the operation and enters to the standby state. On the other hand, the slave side releases the bus state after sending or receiving the NACK “H” level. The master side generates Stop condition or Start condition in this released bus state.

• Acknowledge timing overview diagram

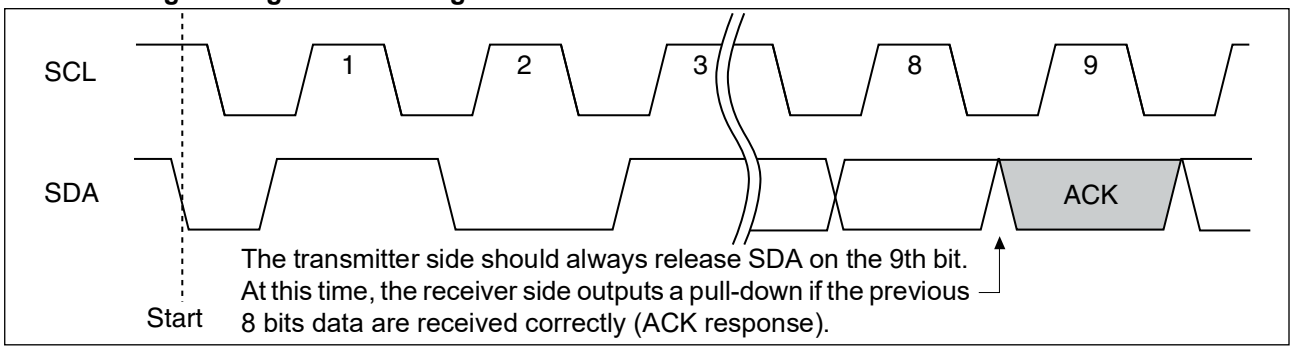

■ DEVICE ADDRESS WORD (Slave address)

Following the start condition, the master inputs the 8 bits device address word to start I²C communication. The device address word (8 bits) consists of a device Type code (4 bits), device address code (3 bits) and a read/write code (1 bit).

- Device Type Code (4 bits)

The upper 4 bits of the device address word are a device type code that identifies the device type, and are fixed at “1010” for the MB85RC512TY.

- Device Address Code (3 bits)

Following the device type code, the 3 bits of the device address code are input in order of A2, A1 and A0. The device address code identifies one device from up to eight devices connected to the bus. Each MB85RC512TY is given a unique 3 bits code on the device address pin (external hardware pin A2, A1 and A0). The slave only responds if the received device address code is equal to this unique 3 bits code.

- Read/Write Code (1 bit)

The 8th bit of the device address word is the R/W (read/write) code. When the R/W code is “0”, a write operation is enabled, and the R/W code is “1”, a read operation is enabled for the MB85RC512TY.

It turns to a stand-by state if the device code is not “1010” or device address code does not equal to pin A2, A1 and A0.

• Device Address Word

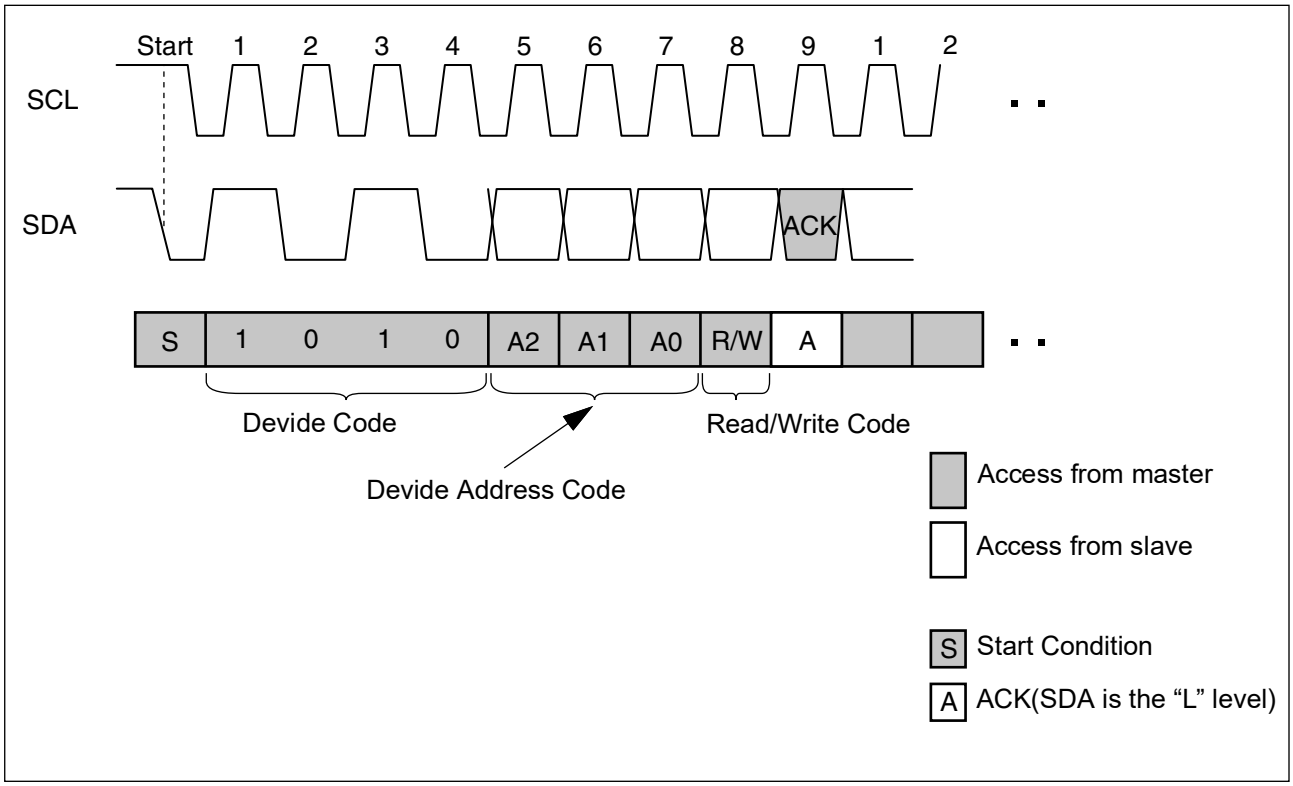

■ DATA STRUCTURE

In the I²C bus, the acknowledge “L” level is output on the 9th bit by a slave, after the 8 bits of the device address word following the start condition are input by a master. After confirming the acknowledge response by the master, the master outputs 8 bits × 2 memory address to the slave. When the each memory address input ends, the slave again outputs the acknowledge “L” level. After this operation, the I/O data follows in units of 8 bits, with the acknowledge “L” level output after every 8 bits.

It is determined by the R/W code whether the data line is driven by the master or the slave. However, the clock line shall be driven by the master. For a write operation, the slave will accept 8 bits from the master, then send an acknowledge. If the master detects the acknowledge, the master will transfer the next 8 bits. For a read operation, the slave will place 8 bits on the data line, then wait for an acknowledge from the master.

■ FeRAM ACKNOWLEDGE -- POLLING NOT REQUIRED

The MB85RC512TY performs the high speed write operations, so any waiting time for an ACK polling* does not occur.

*: In E²PROM, the Acknowledge Polling is performed as a progress check whether rewriting is executed or not. It is normal to judge by the 9th bit of Acknowledge whether rewriting is performed or not after inputting the start condition and then the device address word (8 bits) during rewriting.

■ WRITE PROTECT (WP)

The entire memory array can be write protected using the Write Protect pin. When the Write Protect pin is set to the “H” level, the entire memory array will be write protected. When the Write Protect pin is the “L” level, the entire memory array will be rewritten. Reading is allowed regardless of the WP pin's “H” level or “L” level.

Note : The Write Protect pin is pulled down internally to the VSS pin, therefore if the Write Protect pin is open, the pin status is detected as the “L” level (write enabled).

■ COMMAND

- Byte Write

If the device address word (R/W “0” input) is sent following the start condition, the slave responds with an ACK. After this ACK, write addresses and data are sent in the same way, and the write ends by generating a stop condition at the end.

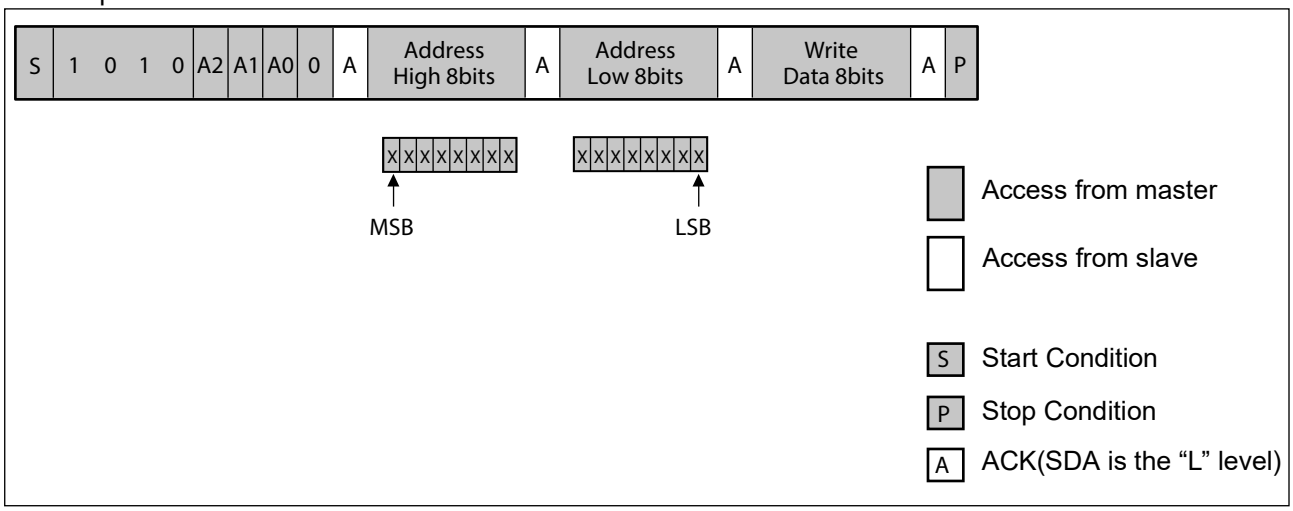

- Page Write

If additional 8 bits are continuously sent after the same command (except stop condition) as Byte Write, a page write is performed. The memory address rolls over to first memory address (0000_H) at the end of the address. Therefore, if more than 64 Kbytes are sent, the data is overwritten in order starting from the start of the memory address that was written first. Because FeRAM performs the high-speed write operations, the data will be written to FeRAM right after the ACK response finished.

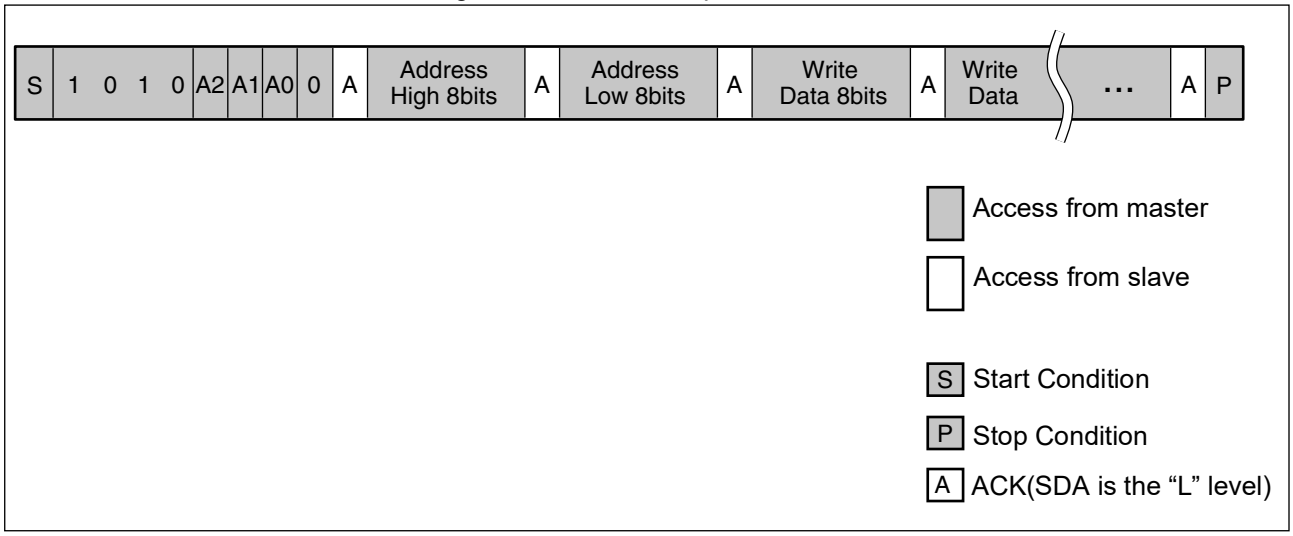

Note: It is not necessary to take a period for internal write operation cycles from the buffer to the memory after the stop condition is generated.

- Current Address Read

When the previous write or read operation finishes successfully up to the stop condition and assumes the last accessed address is “n”, then the address at “n+1” is read by sending the following command unless turning the power off. If the memory address is last address, the address counter will roll over to (0000_H). The current address in memory address buffer is undefined immediately after the power is turned on.

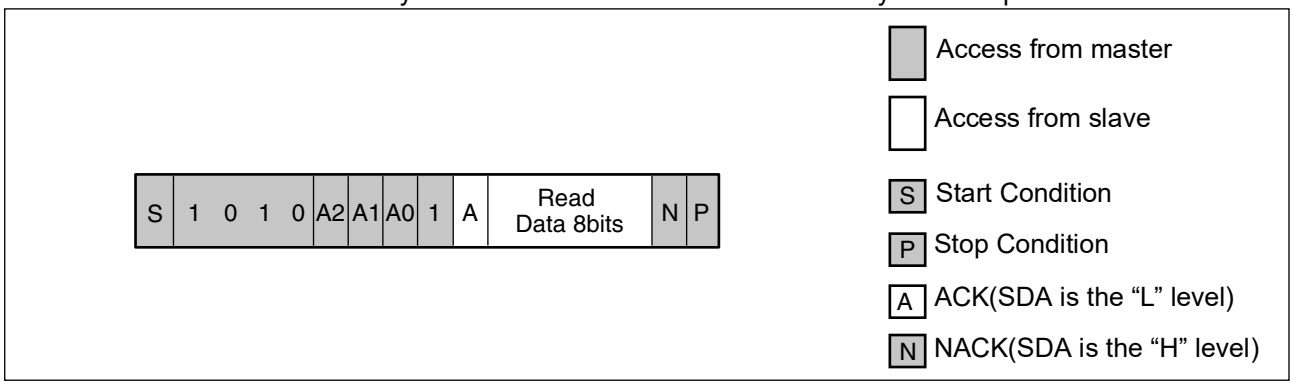

- Random Read

The one byte of data from the memory address saved in the memory address buffer can be read out synchronously to SCL by specifying the address in the same way as for a write, and then issuing another start condition and sending the Device Address Word (R/W “1” input).

The final NACK (SDA is the “H” level) is issued by the receiver that receives the data. In this case, this bit is issued by the master side.

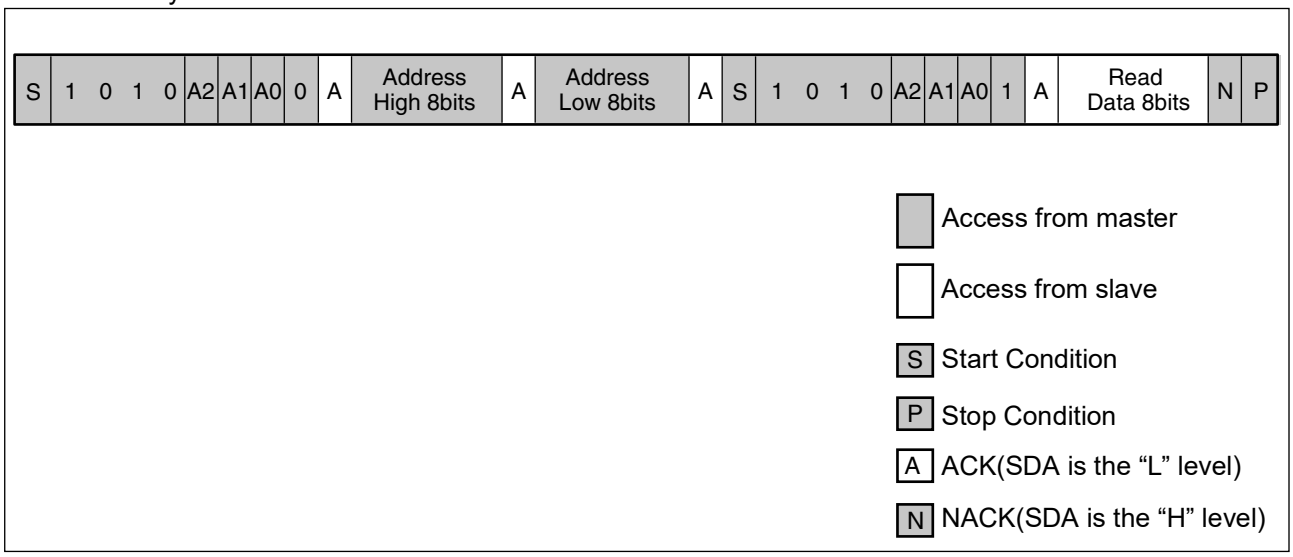

- Sequential Read

Data can be received continuously following the Device address word (R/W “1” input) after specifying the address in the same way as for Random Read. If the read reaches the end of address, the internal read address automatically rolls over to first memory address (0000_H) and keeps reading.

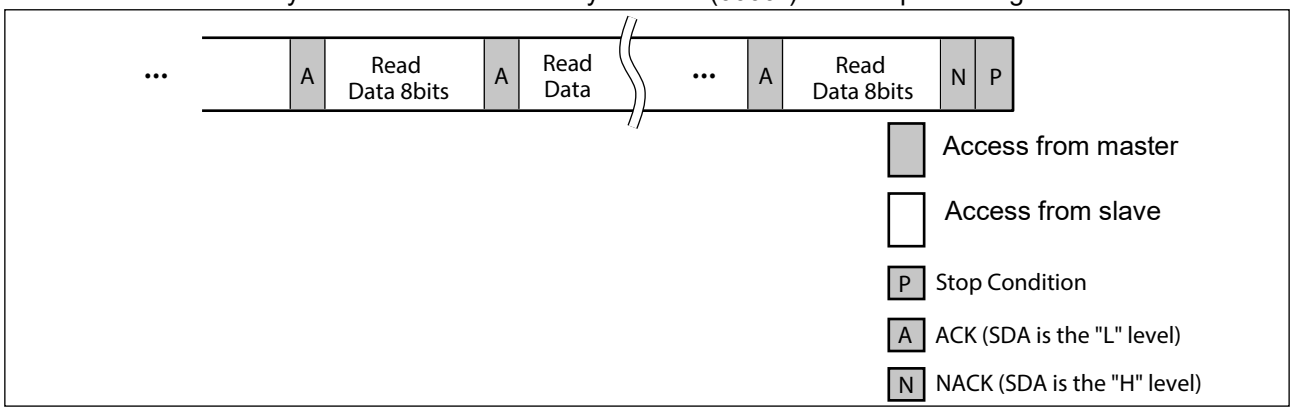

- High Speed Mode

MB85RC512TY supports High Speed mode up to 3.4 MHz. By sending an entry command (0000 1XXX) after start condition from the master side, it informs to the slave that the data transmission with High Speed mode will start.

Since there is no slave side which is allowed to respond to this entry command, NACK response continues from the slave side. After the master side recognizes this NACK response, the master side changes its state to High Speed mode and enables the bidirectional communication up to 3.4 MHz.

By sending Stop condition, it exits out of the state in High Speed communication.

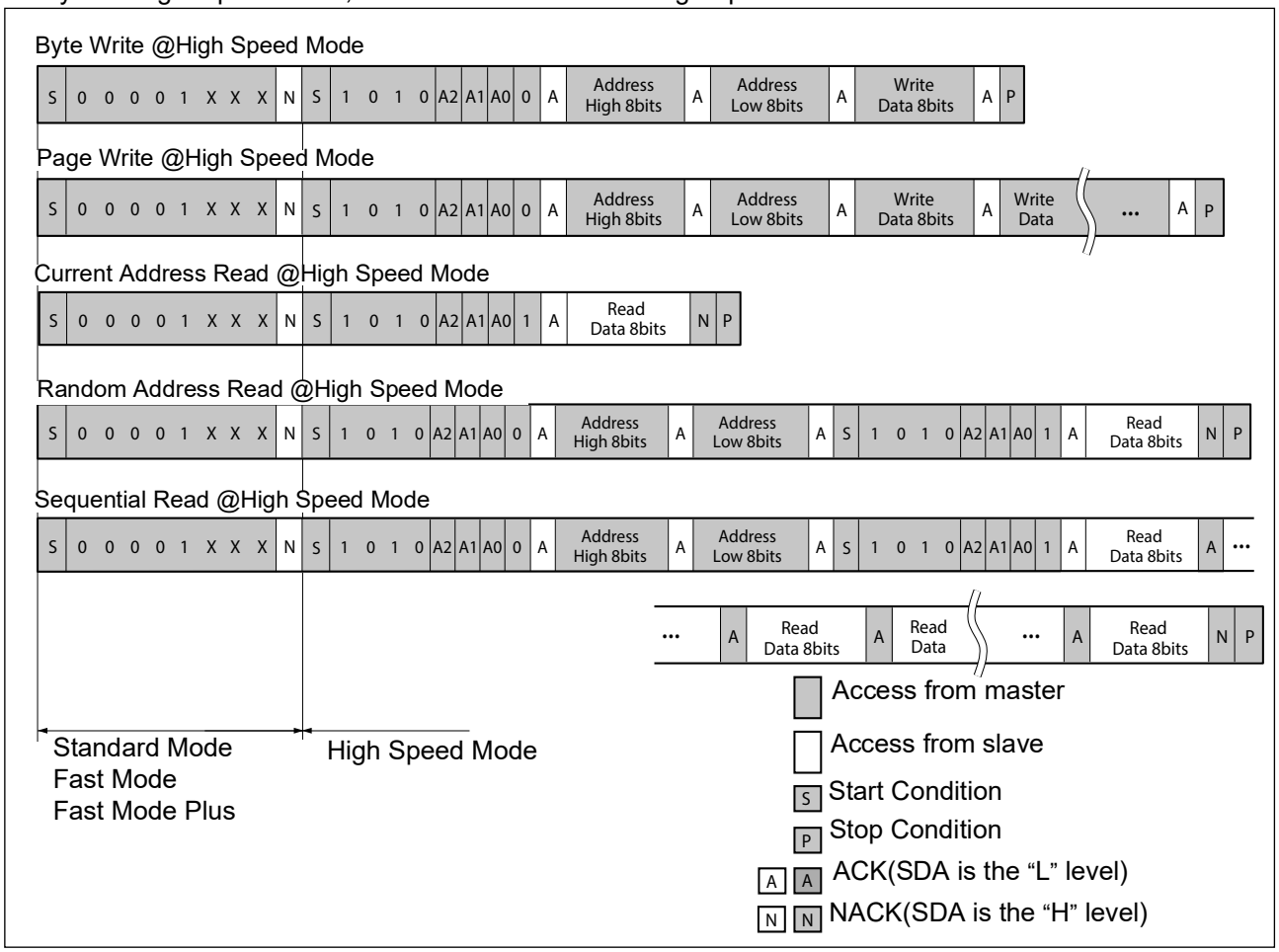

• Sleep Mode

MB85RC512TY provides Sleep mode which reduces less current consumption than Standby mode, by stooping the internal regulator circuits. Following sequences enable the Sleep mode transition.

<Transition to Sleep mode>

a) The master sends start condition followed by F8h.
b) After ACK response from slave, the master sends the device address word.
In this device address word, Read/Write code is Don't care.
c) After ACK response from slave, the master re-sends the start condition followed by 86h.
d) The slave moves to Sleep mode after ACK response to the master.

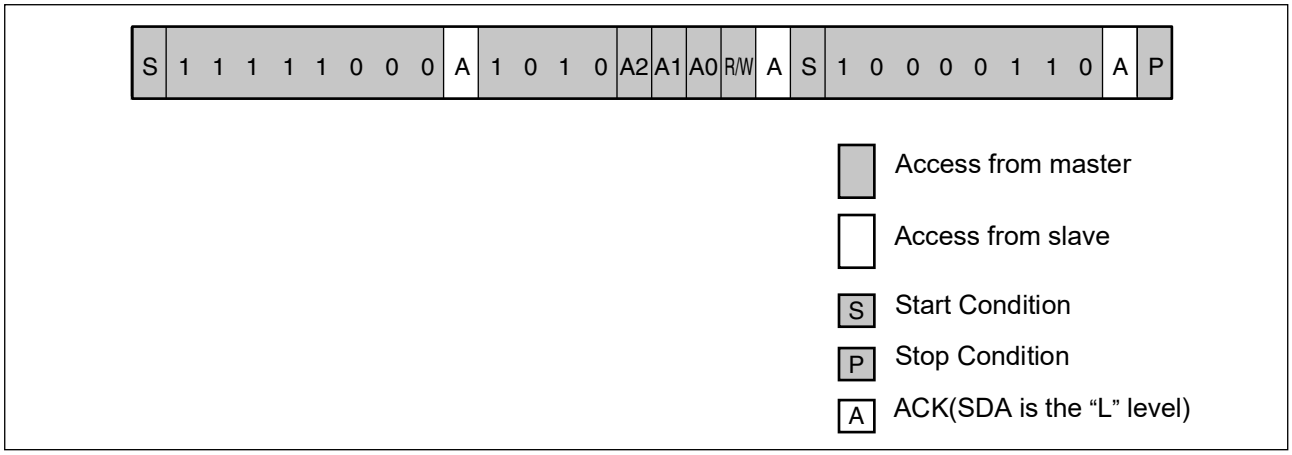

Even if the MB85RC512TY stays in the Sleep mode, SDA and SCL signals are monitored. Following sequences enable the transition to Standby mode after recovery time (t_{REC}) of internal regulator circuits.

<Exit from Sleep mode>

a) The master sends start condition followed by device address word.
In this device address word, Read/Write code is Don't care.
b) At the rising edge of 9th clock from start condition, an internal regulator starts to operate its recovery sequence.
c) After the recovery time (t_{REC}) passed, standby mode enabled.

After returning to Standby mode, reading and writing are enabled by sending each command starts with start condition.

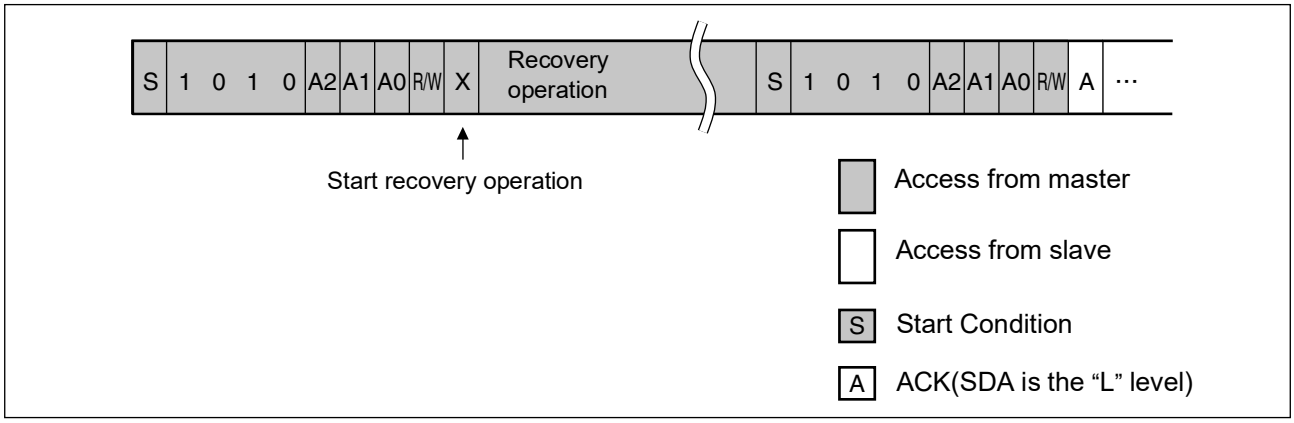

- Device ID

The Device ID command reads fixed Device ID. The size of Device ID is 3 bytes and consists of manufacturer ID and product ID. The Device ID is read-only and can be read out by following sequences.

a) The master sends the Reserved Slave ID $F8_H$ after the START condition.
b) The master sends the device address word after the ACK response from the slave.
In this device address word, R/W code is “Don't care”.
c) The master re-sends the START condition followed by the Reserved Slave ID $F9_H$ after the ACK response from the slave.
d) The master read out the Device ID succeedingly in order of Data Byte 1st / 2nd / 3rd after the ACK response from the slave.
e) The master responds the NACK (SDA is the “H” level) after reading 3 bytes of the Device ID.
In case the master respond the ACK after reading 3 bytes of the Device ID, the master re-reading the Device ID from the 1st byte.

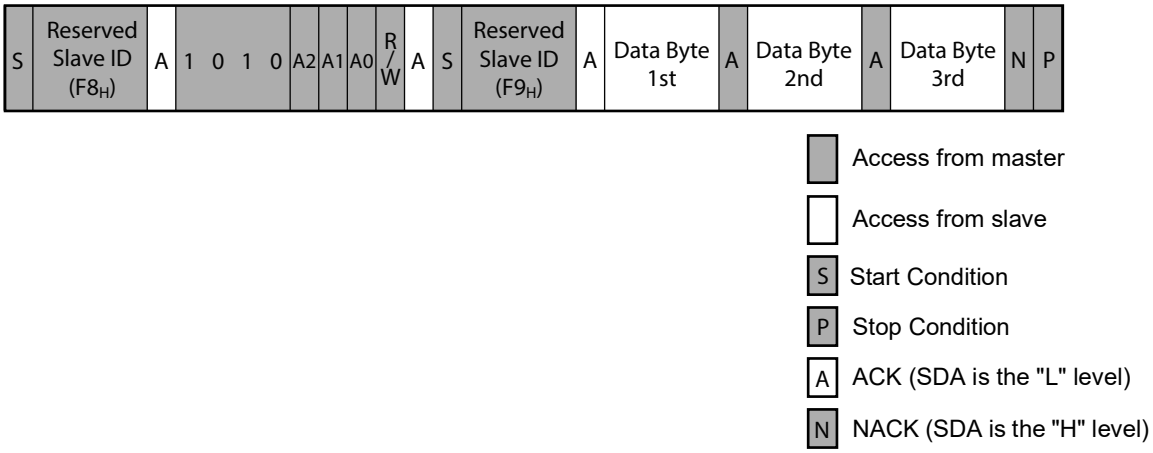

Data Byte 1st								Data Byte 2nd				Data Byte 3rd											
Manufacture ID = $00A_H$												Product ID = 598_H											
11	10	9	8	7	6	5	4	3	2	1	0	11	10	9	8	7	6	5	4	3	2	1	0
												Density = 5_H				Proprietary use							
0	0	0	0	0	0	0	0	1	0	1	0	0	1	0	1	1	0	0	1	1	0	0	0

■ SOFTWARE RESET SEQUENCE OR COMMAND RETRY

In case the malfunction has occurred after power on, the master side stopped the I²C communication during processing, or unexpected malfunction has occurred, execute the following (1) software recovery sequence just before each command, or (2) retry command just after failure of each command.

(1) Software Reset Sequence

Since the slave side may be outputting “L” level, do not force to drive “H” level, when the master side drives the SDA port. This is for preventing a bus conflict. The additional hardware is not necessary for this software reset sequence.

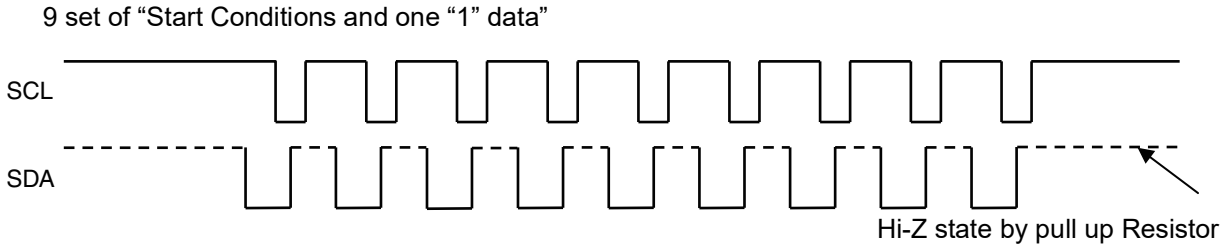

Send “Start Condition and one data “1””.
Repeat these 9 times just before Write or Read command.

(2) Command Retry

Command retry is useful to recover from failure response during I²C communication.

■ ABSOLUTE MAXIMUM RATINGS

Parameter	Symbol	Rating		Unit
		Min	Max	
Power supply voltage*	V_{DD}	– 0.5	+4.0	V
Input voltage*	V_{IN}	– 0.5	V_{DD} + 0.5 (≤ 4.0)	V
Output voltage*	V_{OUT}	– 0.5	V_{DD} + 0.5 (≤ 4.0)	V
Operation ambient temperature	T_A	– 40	+ 125	°C
Storage temperature	Tstg	– 55	+ 125	°C

*: These parameters are based on the condition that VSS is 0 V.

WARNING: Semiconductor devices can be permanently damaged by application of stress (voltage, current, temperature, etc.) in excess of absolute maximum ratings. Do not exceed these ratings.

■ RECOMMENDED OPERATING CONDITIONS

Parameter	Symbol	Value			Unit
		Min	Typ	Max	
Power supply voltage*1	V_{DD}	1.8	3.3	3.6	V
Operation ambient temperature*2	T_A	– 40	—	+ 125	°C

*1: These parameters are based on the condition that VSS is 0 V.

*2: Ambient temperature when only this device is working. Please consider it to be the almost same as the package surface temperature.

WARNING: The recommended operating conditions are required in order to ensure the normal operation of the semiconductor device. All of the device's electrical characteristics are warranted when the device is operated within these ranges.

Always use semiconductor devices within their recommended operating condition ranges. Operation outside these ranges may adversely affect reliability and could result in device failure.

No warranty is made with respect to uses, operating conditions, or combinations not represented on the data sheet. Users considering application outside the listed conditions are advised to contact their representatives beforehand.

■ ELECTRICAL CHARACTERISTICS

1. DC Characteristics

(within recommended operating conditions)

Parameter	Symbol	Condition	Value			Unit
			Min	Typ (T_A=25 °C)	Max	
Input leakage current*1	$\|I_{LI}\|$	V_{IN} = 0 V to V_{DD}	—	—	1	μA
Output leakage current*2	$\|I_{LO}\|$	V_{OUT} = 0 V to V_{DD}	—	—	1	μA
Operating power supply current	I_{DD}	SCL = 0.1 MHz	—	—	—	mA
		SCL = 1 MHz	—	0.09	0.4	mA
		SCL = 3.4 MHz	—	0.24	0.4	mA
Standby current	I_{SB}	SCL, SDA = V_{DD} A0, A1, A2, WP = 0 V or Open Under Stop Condition	—	10	150	μA
Sleep current	I_{ZZ}	SCL, SDA = V_{DD} A0, A1, A2, WP = 0 V		0.20	10	μA
"H" level input voltage	V_{IH}	V_{DD} = 1.8 V to 3.6 V	V_{DD} × 0.8	—	V_{DD} + 0.5	V
"L" level input voltage	V_{IL}	V_{DD} = 1.8 V to 3.6 V	-0.5	—	V_{DD} × 0.2	V
"L" level output voltage	V_{OL}	I_{OL} = 3 mA	—	—	0.4	V
Input resistance for WP, A0, A1 and A2 pins	R_{IN}	—	11	33	125	kΩ

*1: Applicable pin: SCL,SDA

*2: Applicable pin: SDA

2. AC Characteristics

Parameter	Symbol	Value								Unit
		STANDARD MODE		FAST MODE		FAST MODE PLUS		HIGH SPEED MODE		
		Min	Max	Min	Max	Min	Max	Min	Max	
SCL clock frequency	FSCL	0	100	0	400	0	1000	0	3400	kHz
Clock high time	T_{HIGH}	4000	—	600	—	260*1	—	60	—	ns
Clock low time	T_{LOW}	4700	—	1300	—	500*2	—	160	—	ns
SCL/SDA rising time	T_r	—	1000	—	300	—	300	—	80	ns
SCL/SDA falling time	T_f	—	300	—	300	—	120	—	80	ns
Start condition hold	$T_{HD:STA}$	4000	—	600	—	250	—	160	—	ns
Start condition setup	$T_{SU:STA}$	4700	—	600	—	250	—	160	—	ns
SDA input hold	$T_{HD:DAT}$	0	—	0	—	0	—	0	—	ns
SDA input setup	$T_{SU:DAT}$	250	—	100	—	50	—	16*4	—	ns
SDA output hold	$T_{DH:DAT}$	0	—	0	—	0	—	0	—	ns
Stop condition setup	$T_{SU:STO}$	4000	—	600	—	250	—	160	—	ns
SDA output access after SCL falling	T_{AA}	—	3000	—	900	—	450*3	—	130	ns
Pre-charge time	T_{BUF}	4700	—	1300	—	500	—	300	—	ns
Noise suppression time (SCL and SDA)	T_{SP}	—	50	—	50	—	50	—	5	ns

*1: 300ns @VDD ≤ 2.7 V

*2: 600ns @VDD ≤ 2.7 V

*3: 550ns @VDD ≤ 2.7 V

*4: 26ns @VDD ≤ 2.7 V

AC characteristics were measured under the following measurement conditions.

Power supply voltage	: 1.8 V to 3.6 V
Operation ambient temperature	: – 40 °C to + 125 °C
Input voltage magnitude	: $V_{DD} \times 0.2$ to $V_{DD} \times 0.8$
Input rising time	: 5 ns
Input falling time	: 5 ns
Input judge level	: $V_{DD}/2$
Output judge level	: $V_{DD}/2$
Output load capacitance	: 100 pF

3. AC Timing Definitions

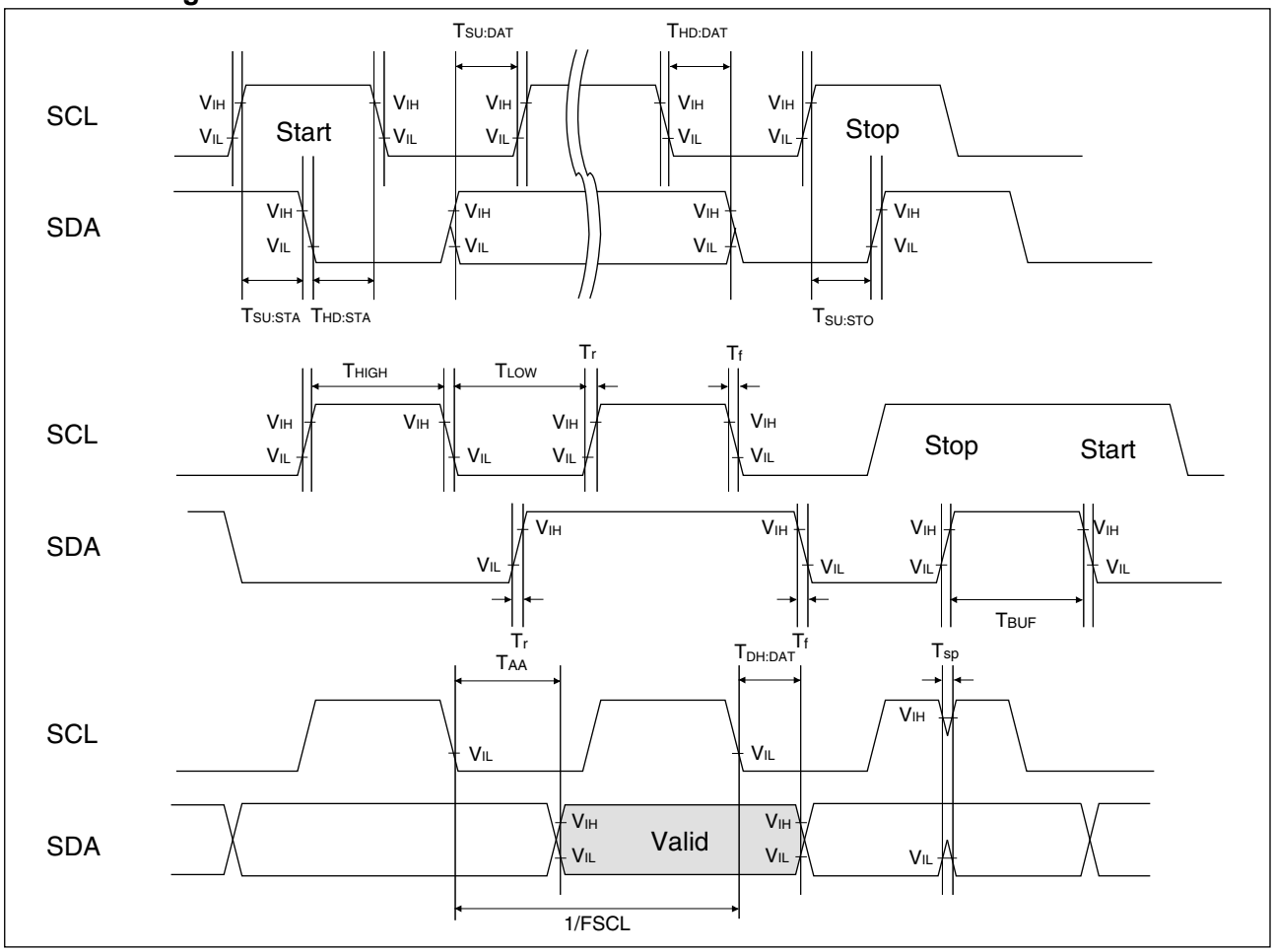

4. Pin Capacitance

Parameter	Symbol	Conditions	Value			Unit
			Min	Typ	Max	
I/O capacitance	$C_{I/O}$	V_{DD} = 3.3 V, f = 1 MHz, T_A = + 25 °C	—	—	8	pF
Input capacitance	C_{IN}		—	—	8	pF

5. AC Test Load Circuit

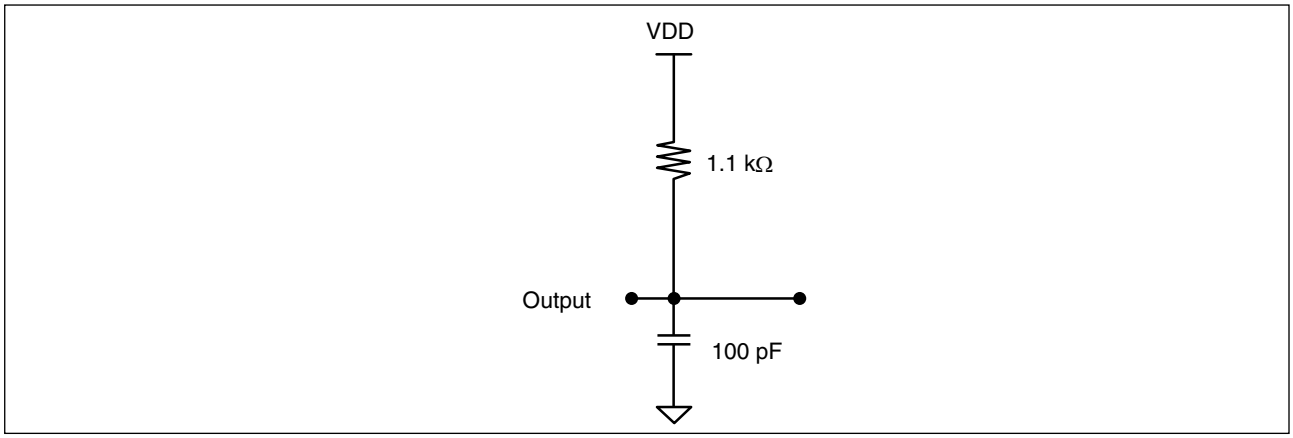

■ POWER ON/OFF SEQUENCE

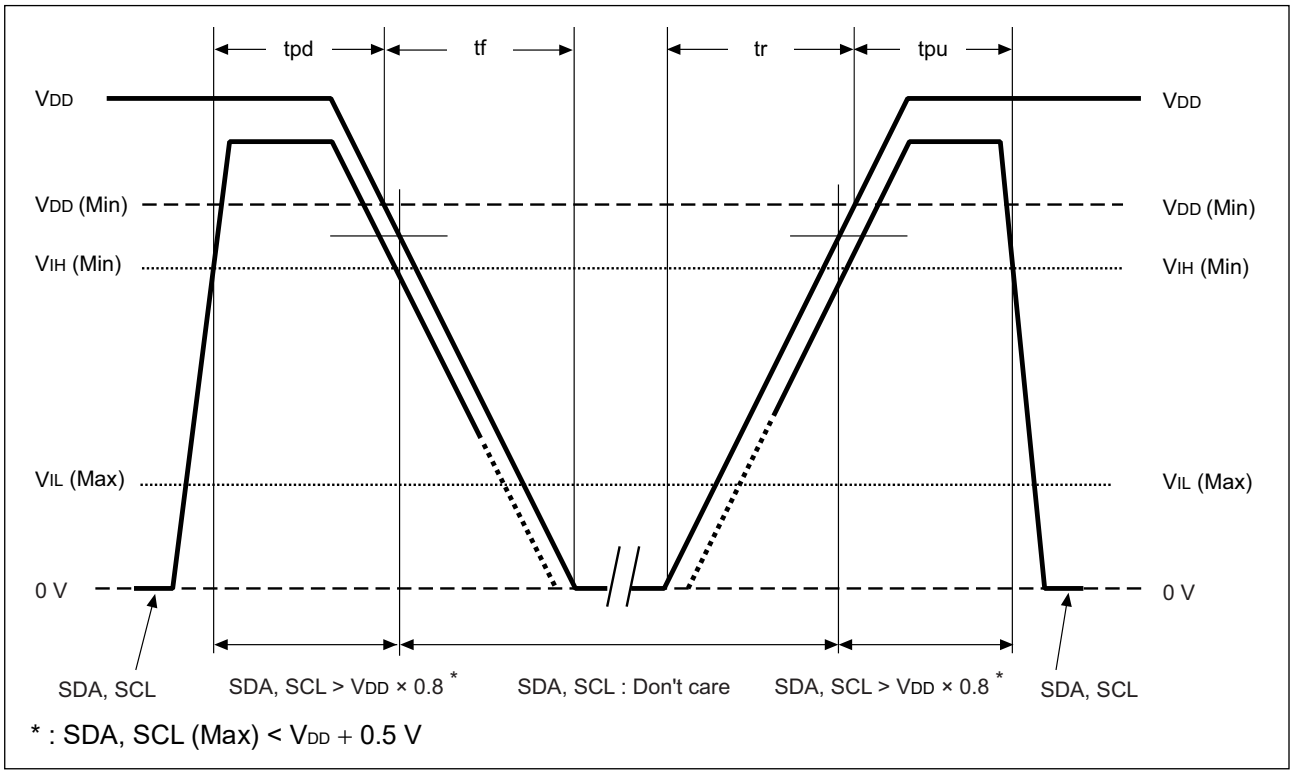

When applying relatively short term V_{DD} pulse whose peak is more than 1.7V, it is required to set falling time, tf more than 0.4ms/V. (In case V_{DD} rises over 1.7V and falls just after that, if this term is short, device may lose its function.)

.

Parameter	Symbol	Value		Unit
		Min	Max	
SDA, SCL level hold time during power down	tpd	85	—	ns
SDA, SCL level hold time during power up	tpu	450	—	µs
Power supply rising time	tr	0.05	—	ms/V
Power supply falling time	tf	0.1	—	ms/V
Internal regulator recovery time	t_{REC}	—	450	µs

If the device does not operate within the specified conditions of read cycle, write cycle or power on/off sequence, memory data can not be guaranteed.

■ FeRAM CHARACTERISTICS

Item	Min	Max	Unit	Parameter
Read/Write Endurance*1	10^{13}	—	Times/byte	Operation Ambient Temperature T_A = + 125 °C
Data Retention*2	10.1*3	—	Years	Operation Ambient Temperature T_A = + 125 °C
	40.7	—		Operation Ambient Temperature T_A = + 105 °C
	193.9	—		Operation Ambient Temperature T_A = + 85 °C

*1 : Total number of reading and writing defines the minimum value of endurance, as an FeRAM memory operates with destructive readout mechanism.

*2 : Minimum values define retention time of the first reading/writing data right after shipment.

*3: Under evaluation for more than 10.1 years(+125 °C).
These values are calculated by qualification results.

■ NOTE ON USE

- We recommend programming of the device after reflow. Data written before reflow cannot be guaranteed.
- During the access period from the start condition to the stop condition, keep the level of WP, A0, A1 and A2 pins to the “H” level or the “L” level.

■ ESD AND LATCH-UP

Test	DUT	Value
ESD HBM (Human Body Model) JESD22-A114 compliant	MB85RC512TYPNF-GS-BCE1 MB85RC512TYPNF-GS-BCERE1 MB85RC512TYPN-GS-AME1 MB85RC512TYPN-GS-AMEWE1	≥ |2000 V|
ESD CDM (Charged Device Model) AEC-Q100-011(FI-CDM) compliant		≥ |1000 V|
Latch-Up (I-test) JESD78 compliant		≥ |125mA|
Latch-Up (V_{supply} overvoltage test) JESD78 compliant		≥ 5.4V

■ REFLOW CONDITIONS AND FLOOR LIFE

[JEDEC MSL] : Moisture Sensitivity Level 1 (IPC/JEDEC J-STD-020E)

MB85RC512TYPN-GS-AME1/ MB85RC512TYPN-GS-AMEWE1

[JEDEC MSL] : Moisture Sensitivity Level 3 (IPC/JEDEC J-STD-020E)

MB85RC512TYPNF-GS-BCE1/ MB85RC512TYPNF-GS-BCERE1

■ CURRENT STATUS ON CONTAINED RESTRICTED SUBSTANCES

This product complies with the regulations of REACH Regulations, EU RoHS Directive and China RoHS.

■ ORDERING INFORMATION

Part number	Package	Shipping form	Minimum shipping quantity
MB85RC512TYPNF-GS-BCE1	8-pin, plastic SOP	Tube	—*
MB85RC512TYPNF-GS-BCERE1	8-pin, plastic SOP	Embossed Carrier tape	1500
MB85RC512TYPN-GS-AME1	8-pin, plastic DFN	Tray	—*
MB85RC512TYPN-GS-AMEWE1	8-pin, plastic DFN	Embossed Carrier tape	1500

*: Please contact our sales office about minimum shipping quantity.

■ PACKAGE DIMENSION

(1) MB85RC512TYPNF-GS-BCE1/MB85RC512TYPNF-GS-BCERE1

8-pin plastic SOP(150mil)

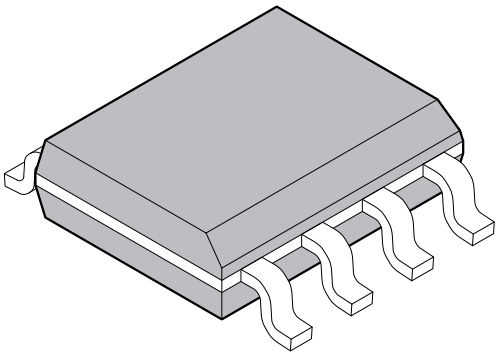

Lead pitch	1.27mm
Package width x Package length	3.90mm x 4.90mm
Lead shape	Gullwing
Sealing method	Plastic mold
Mounting height	1.75mm MAX.

8-pin plastic SOP

Note *: These dimension do not include resin protrution.
Pins width do not include tie bar cutting remaindar.

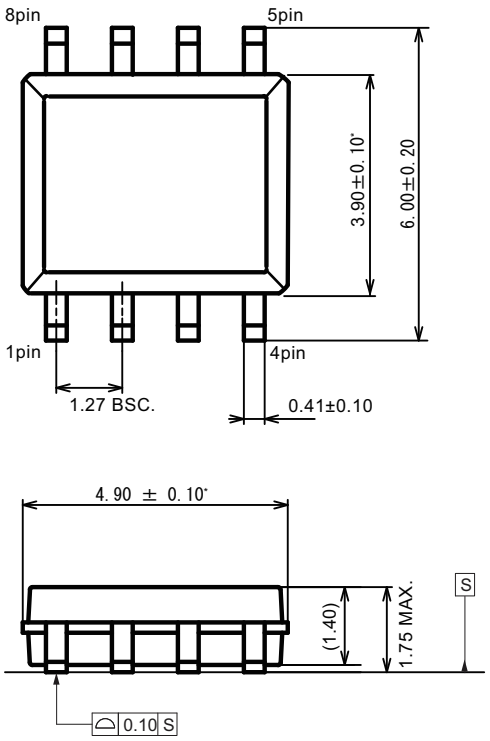

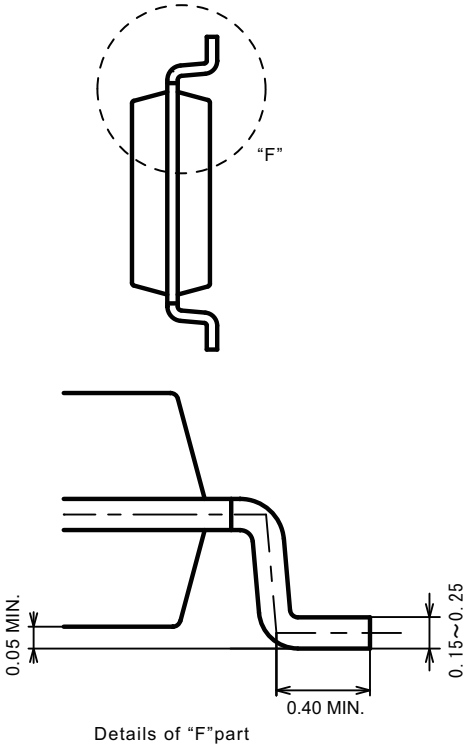

Details of "F"part

Dimension in mm

(2) MB85RC512TYPN-GS-AME1/MB85RC512TYPN-GS-AMEWE1

8-pin plastic DFN		
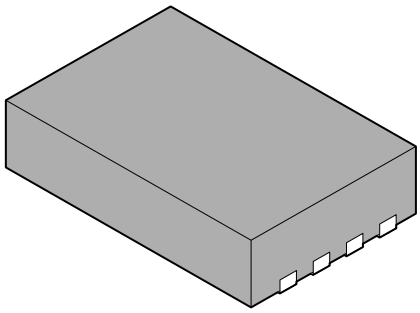	Lead pitch	1.27 mm
	Package width x Package length	5.00 mm × 6.00 mm
	Sealing method	Plastic mold
	Mounting height	0.85 mm MAX

8-pin plastic DFN

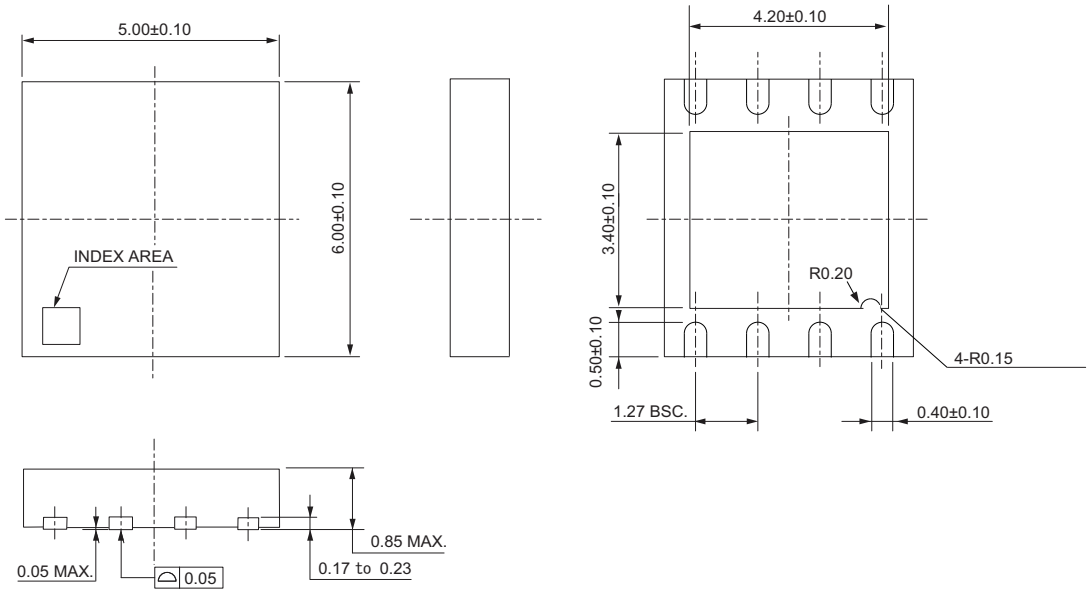

Dimensions in mm.

■ MARKING (Example)

(1) MB85RC512TYPNF-GS-BCE1/MB85RC512TYPNF-GS-BCERE1

[MB85RC512TYPNF-GS-BCE1]
[MB85RC512TYPNF-GS-BCERE1]

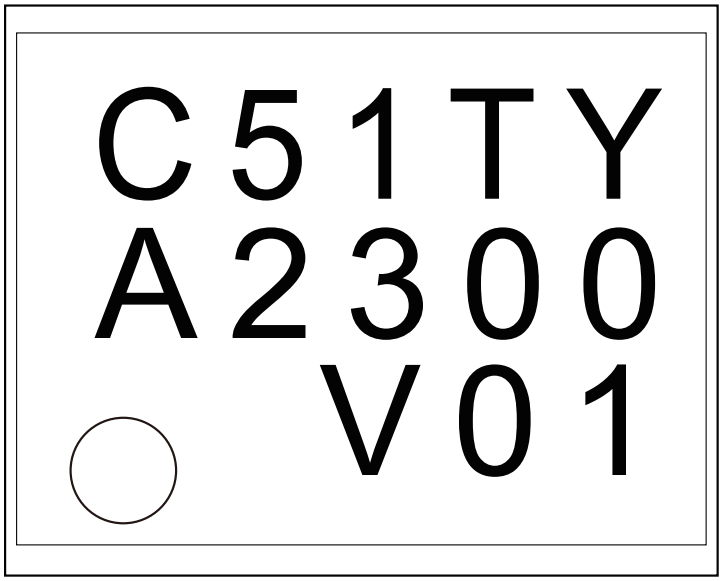

C51TY: Product name
A2300 : A(CS code) + 2300(Year and Week code)
V01 : Trace code

(2) MB85RC512TYPN-GS-AME1/MB85RC512TYPN-GS-AMEWE1

[MB85RC512TYPN-GS-AME1]
[MB85RC512TYPN-GS-AMEWE1]

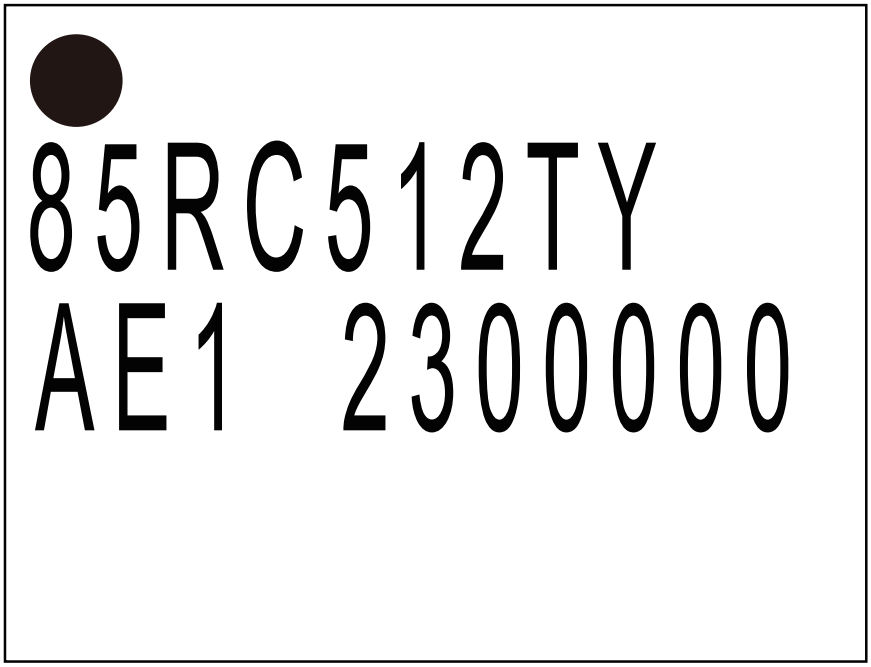

85RC512TY: Product name
AE1 : A(CS code) + E1(Environmental code)
2300000 : 2300(Year and Week code) + 000(Trace code)

■ PACKING INFORMATION

(1) MB85RC512TYPNF-GS-BCE1/MB85RC512TYPNF-GS-BCERE1

1. Tube (MB85RC512TYPNF-GS-BCE1)

1.1 Tube Dimensions

- Tube/stopper shape (example)

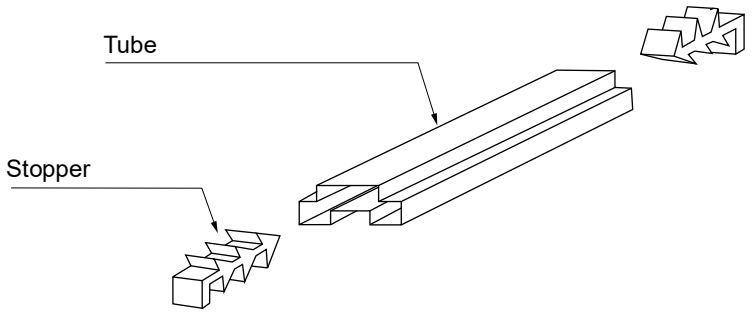

- **Tube cross-sections** and Maximum quantity

Maximum quantity		
pcs/tube	pcs/inner box	pcs/outer box
85	4,250	17,000

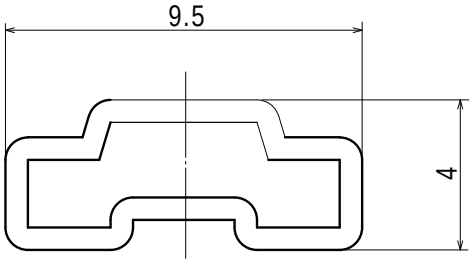

tube length: 500

No heat resistance.
Package should not be baked by using tube.

(Dimensions in mm)

- **Direction of index in tube**

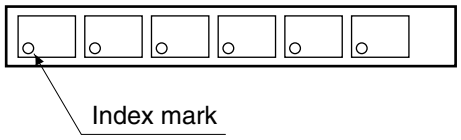

1.2 Product label indicators (example)

Label I: Label on Inner box/Moisture Barrier Bag/ (It sticks it on the reel for the emboss taping)
[C-3 Label (50mm × 100mm) Supplemental Label (20mm × 100mm)]

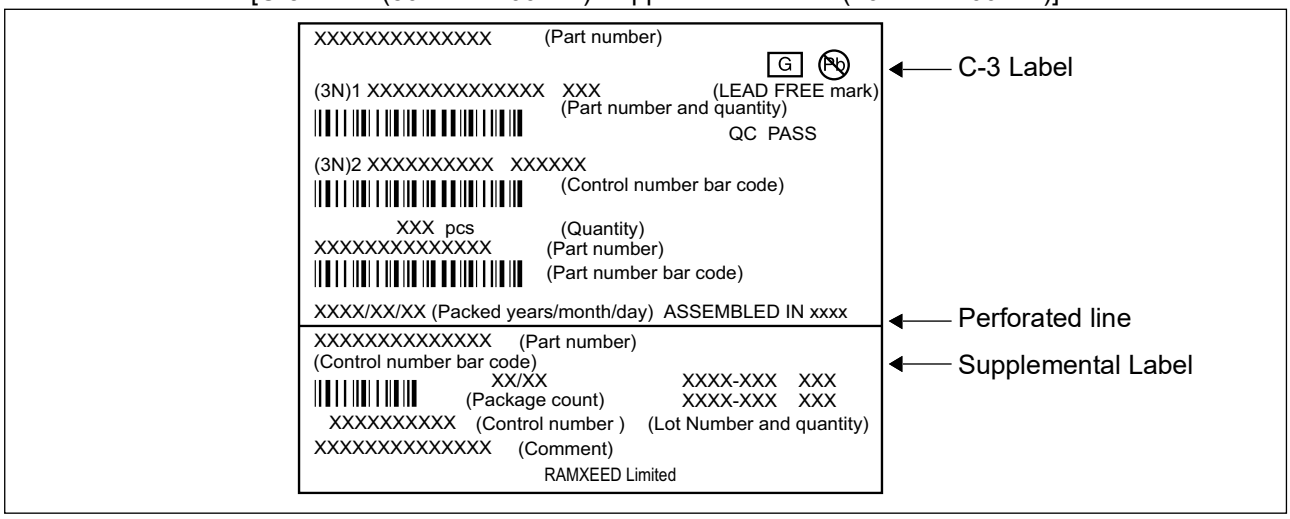

1.3 Dimensions for Containers

(1) Dimensions for inner box

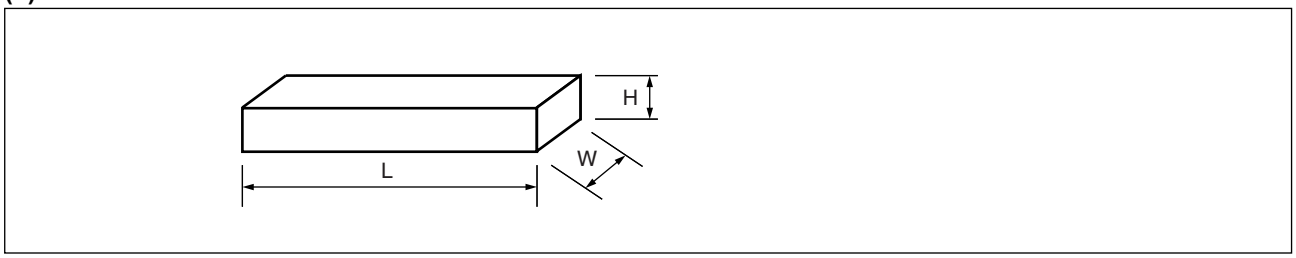

L	W	H
540	125	75

(Dimensions in mm)

(2) Dimensions for outer box

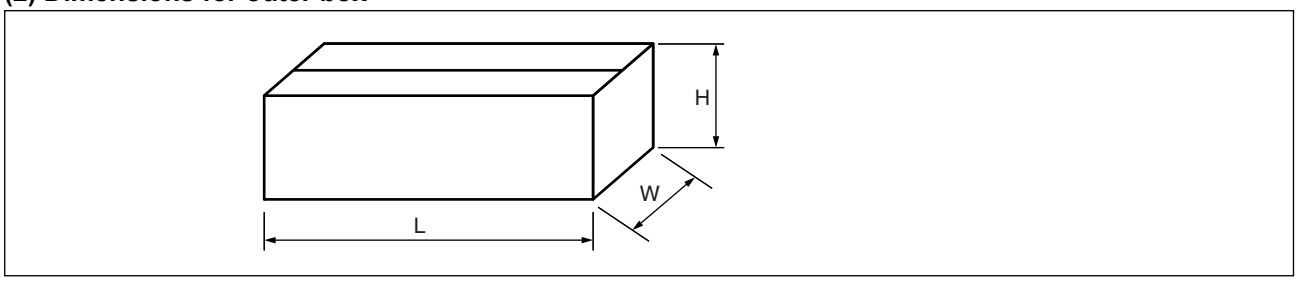

L	W	H
565	270	180

(Dimensions in mm)

2. Emboss Tape (MB85RC512TYPNF-GS-BCERE1)

2.1 Tape Dimensions (not drawn to scale) (8-pin plastic SOP)

Maximum storage capacity		
pcs/reel(Φ254mm)	pcs/inner box	pcs/outer box
1500	1500 (1 pack/inner box)	9000 (6 inner boxes/outer box:Max)

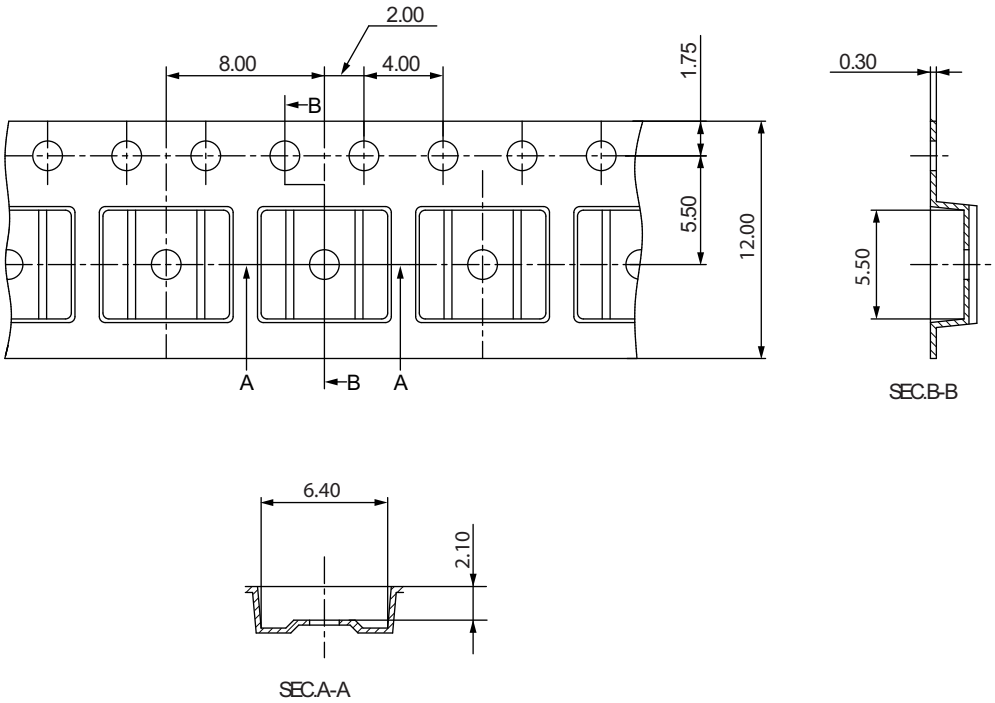

(Dimensions in mm)

Heat proof temperature : No heat resistance.
Package should not be baked by using tape and reel.

2.2 IC orientation

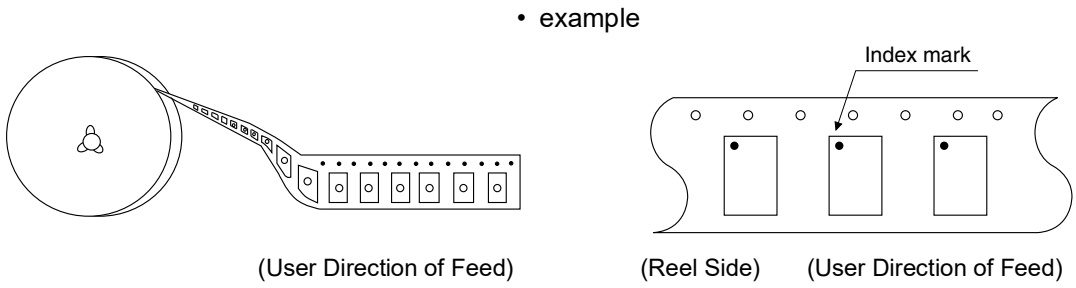

2.3 Reel dimensions

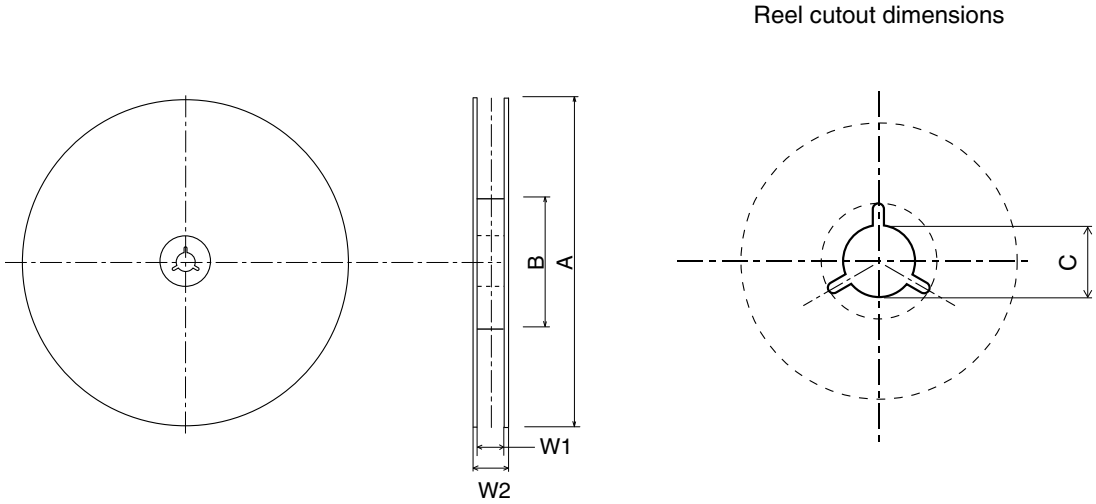

Dimensions in mm

A	B	C	W1	W2
254	100	13	13.5	17.5

2.4 Product label indicators (examples)

Label I: Label on Inner box/Moisture Barrier Bag/ (It sticks it on the reel for the emboss taping)
[C-3 Label (50mm × 100mm) Supplemental Label (20mm × 100mm)]

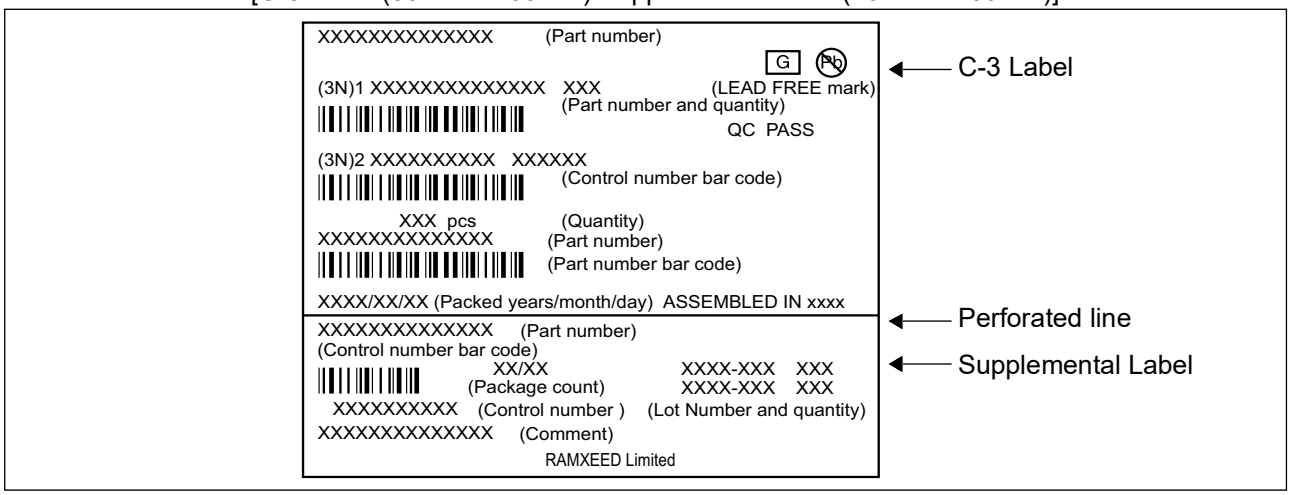

2.5 Dimensions for Containers

(1) Dimensions for inner box

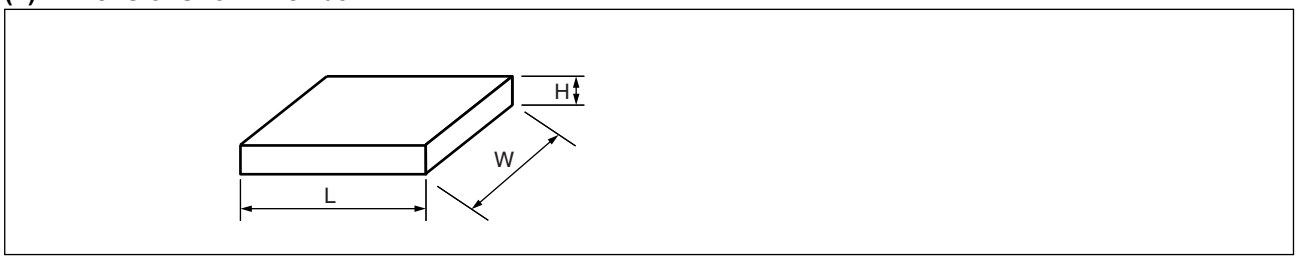

L	W	H
265	260	50

(Dimensions in mm)

(2) Dimensions for outer box

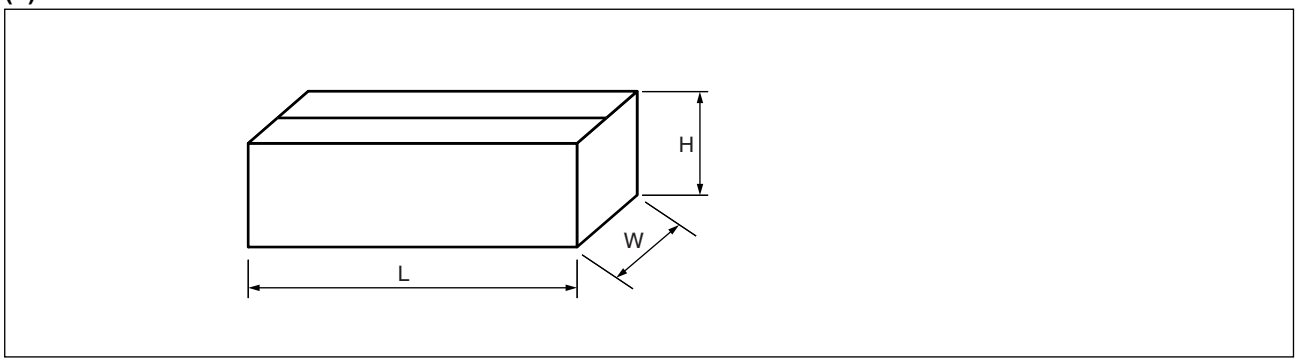

L	W	H
565	270	180

(Dimensions in mm)

(2) MB85RC512TYPN-GS-AME1/MB85RC512TYPN-GS-AMEWE1

1. Tray (MB85RC512TYPN-GS-AME1)

1.1 Tray Dimensions

DFN8

Maximum storage capacity		
pcs/tray	pcs/inner box	pcs/outer box
253	2024	8096

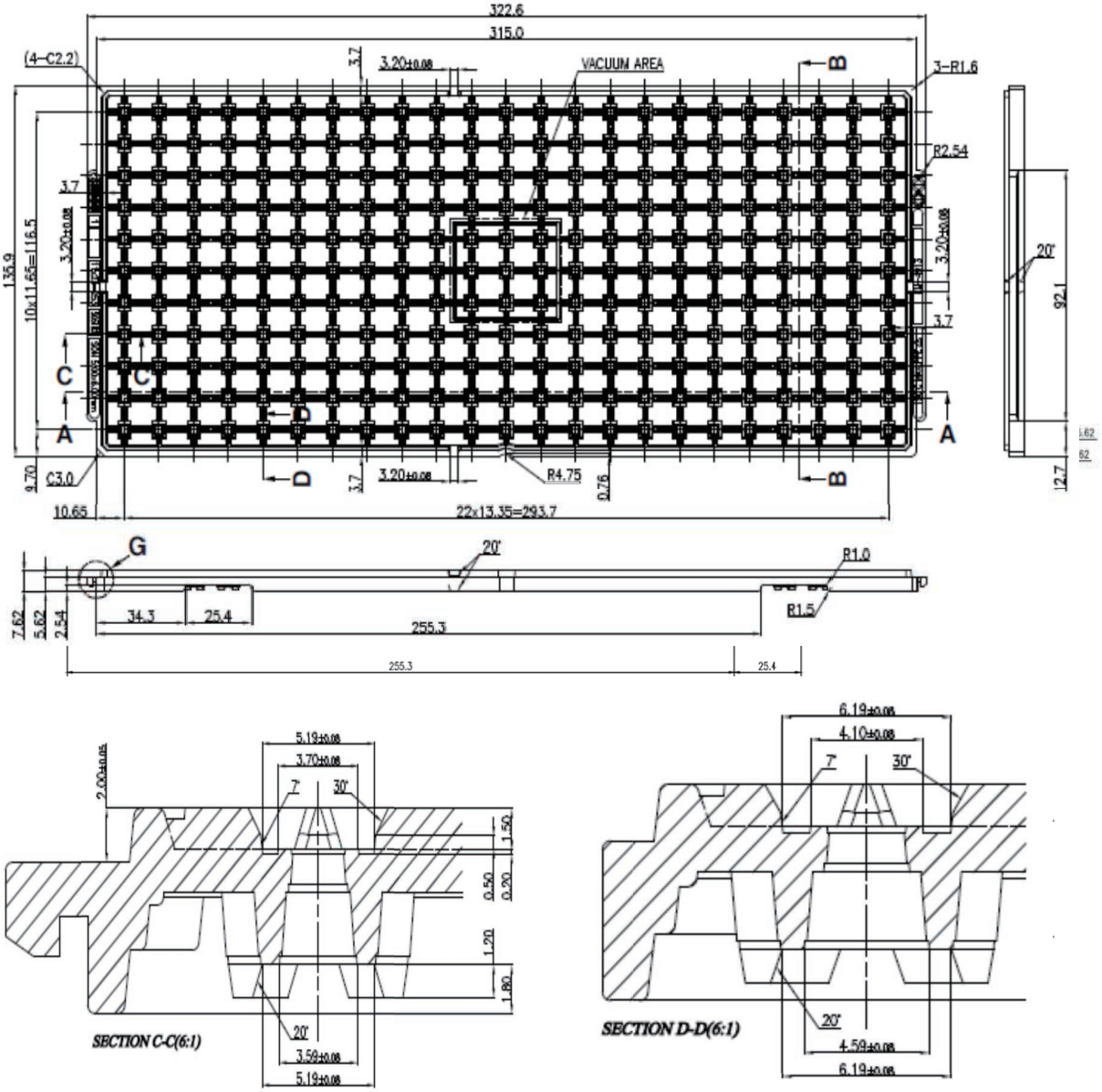

(Dimensions in mm)

Heat proof temperature : 150 °C Max

1.2 IC orientation

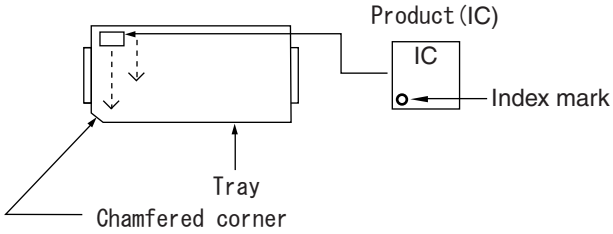

1.3 Product label indicators(example)

Label I: Label on Inner box/Moisture Barrier Bag/ (It sticks it on the reel for the emboss taping)
[C-3 Label (50mm × 100mm) Supplemental Label (20mm × 100mm)]

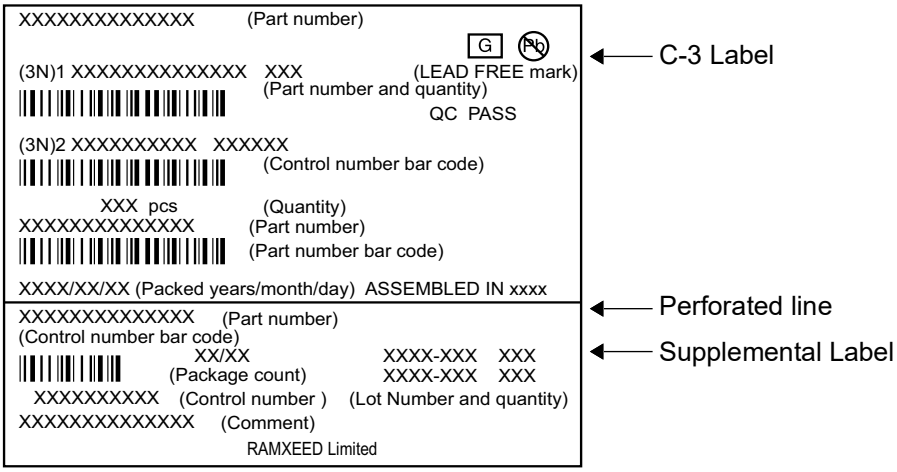

1.4 Dimensions for Containers

(1) Dimensions for inner box

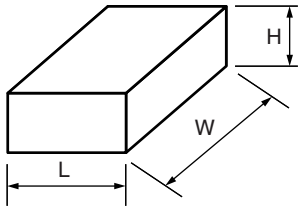

L	W	H
165	360	75

(Dimensions in mm)

(2) Dimensions for outer box

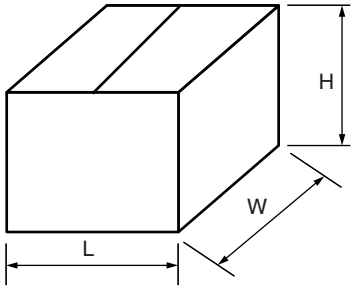

L	W	H
355	385	195

(Dimensions in mm)

2. 1. Emboss Tape (MB85RC512TYPN-GS-AMEWE1)

2.1 Tape Dimensions (not drawn to scale)(8-pin plastic DFN 5mm × 6mm)

Maximum storage capacity		
pcs/reel(Φ254mm)	pcs/inner box	pcs/outer box
1500	1500 (1 pack/inner box)	9000 (6 inner boxes/outer box:Max)

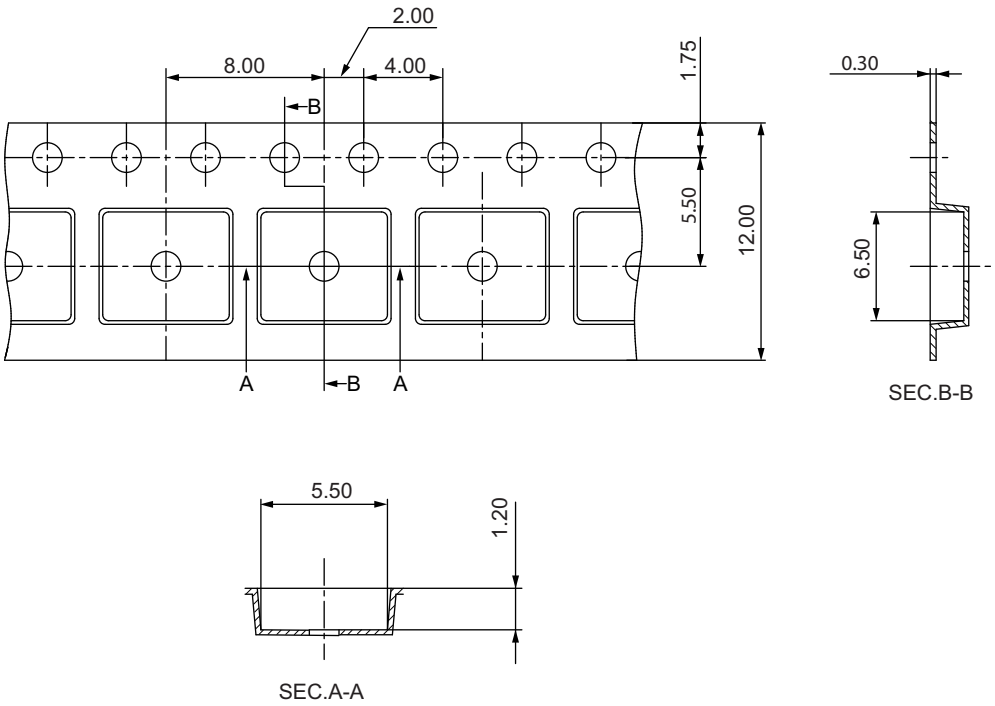

(Dimensions in mm)

Heat proof temperature : No heat resistance.
Package should not be baked by using tape and reel.

2.2 IC orientation

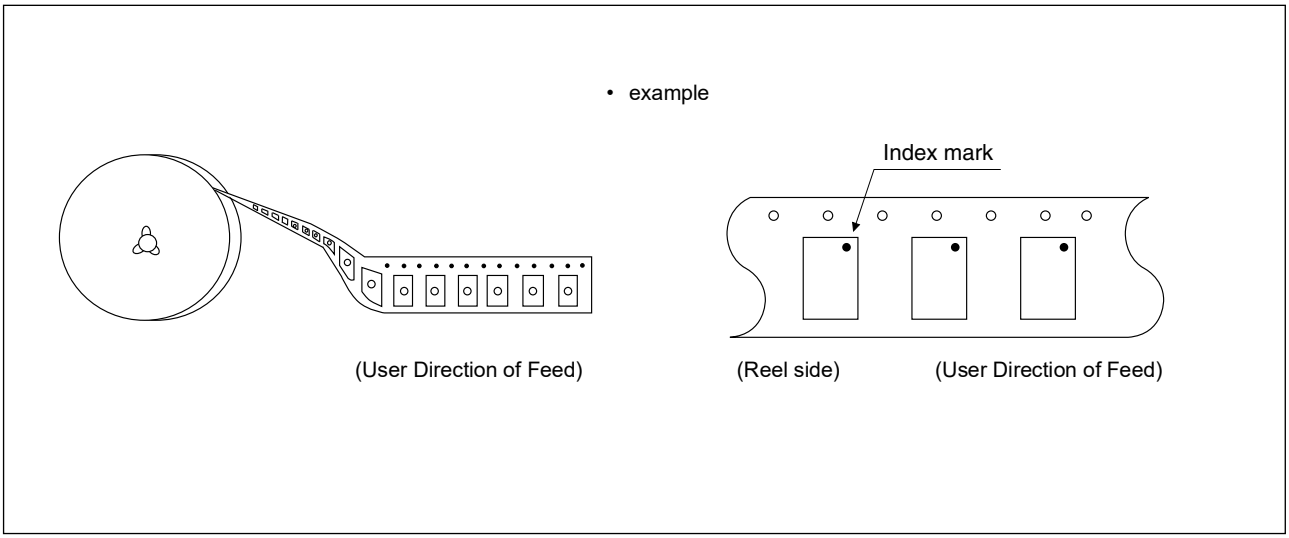

2.3 Reel dimensions

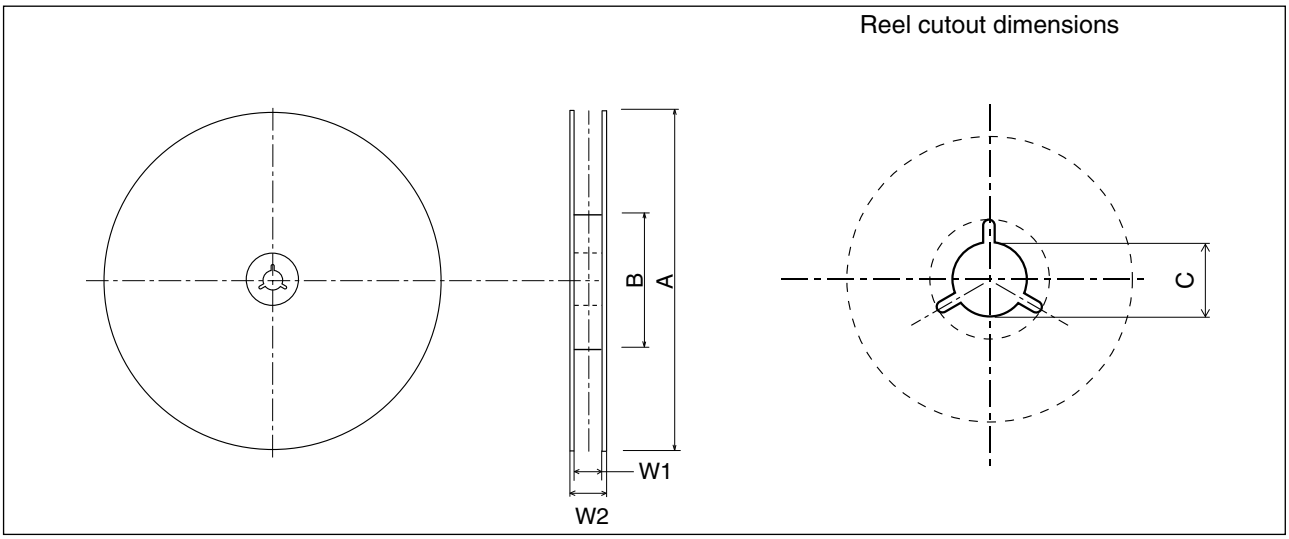

Dimensions in mm

A	B	C	W1	W2
254	100	13	13.5	17.5

2.4 Product label indicators (example)

Label I: Label on Inner box/Moisture Barrier Bag/ (It sticks it on the reel for the emboss taping)
[C-3 Label (50mm × 100mm) Supplemental Label (20mm × 100mm)]

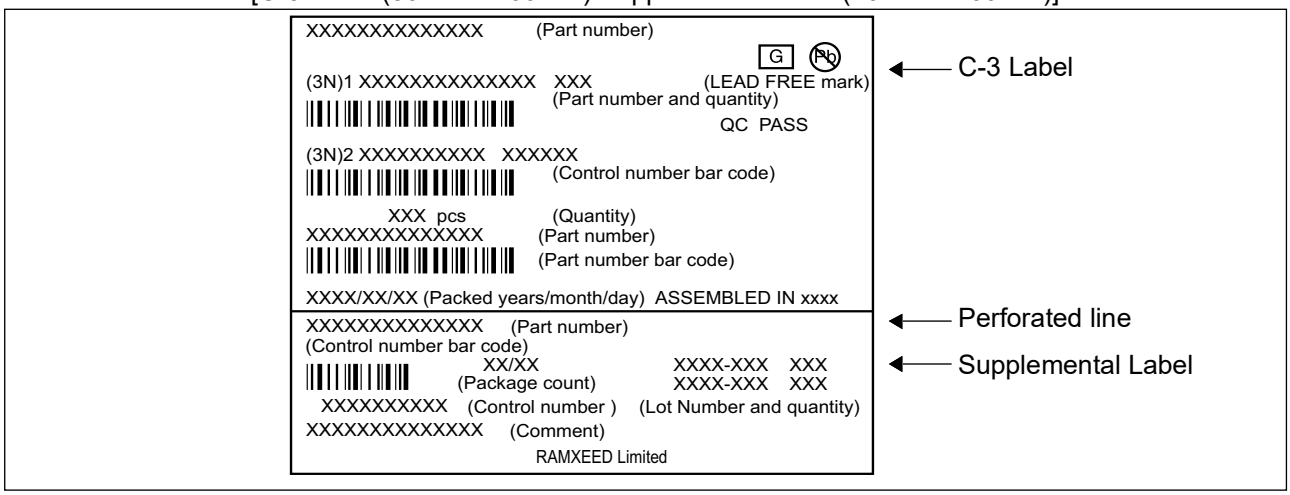

2.5 Dimensions for Containers

(1) Dimensions for inner box

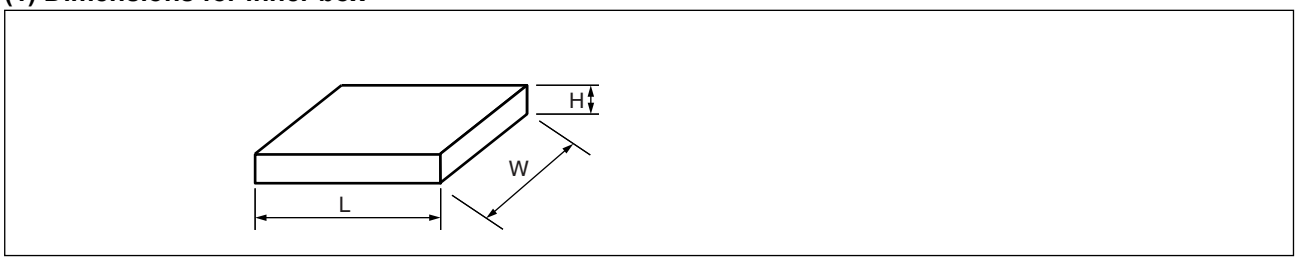

L	W	H
265	260	50

(Dimensions in mm)

(2) Dimensions for outer box

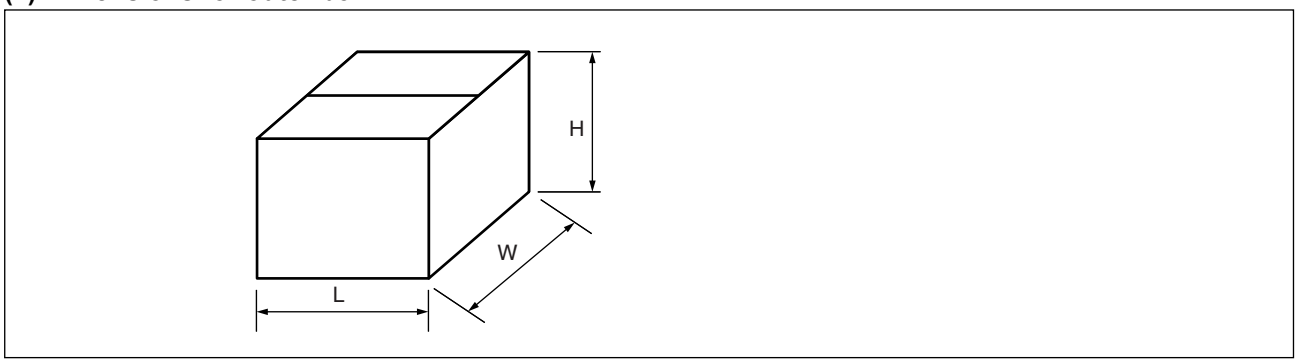

L	W	H
565	270	180

(Dimensions in mm)

■ MAJOR CHANGES IN THIS EDITION

A change on a page is indicated by a vertical line drawn left side of that page.

Page	Section	Change Results
1,17	Data Retention	10.1 years(+125 ℃), 40.7 years(+105 ℃), 193.9 years(+85 ℃)
2	PIN ASSIGNMENT	Change DFN8 Pin Assignment.
14	DC Characteristics	Input High Voltage V_{IH}(MAX): V_{DD} → V_{DD}+0.5 Input Low Voltage V_{IL}(MAX): V_{SS} → -0.5
18	REFLOW CONDITIONS AND FLOOR LIFE	Add MSL1 information.
19	ORDERING INFORMATION	Change Part number for SOP8 and DFN8.
21	PACKAGE DIMENSION	Change DFN8 package dimension for new parts number.
22	MARKING (Example)	Change Marking information for new parts number.
23~	PACKING INFORMATION	Packaging information change due to part number change.

RAMXEED LIMITED
Shin-Yokohama Chuo Building, 2-100-45 Shin-Yokohama,
Kohoku-ku, Yokohama, Kanagawa 222-0033, Japan
https://ramxeed.com/

All Rights Reserved.
RAMXEED LIMITED, its subsidiaries and affiliates (collectively, "RAMXEED ") reserves the right to make changes to the information contained in this document without notice. Please contact your RAMXEED sales representatives before order of RAMXEED device.
Information contained in this document, such as descriptions of function and application circuit examples is presented solely for reference to examples of operations and uses of RAMXEED device. RAMXEED disclaims any and all warranties of any kind, whether express or implied, related to such information, including, without limitation, quality, accuracy, performance, proper operation of the device or non-infringement. If you develop equipment or product incorporating the RAMXEED device based on such information, you must assume any responsibility or liability arising out of or in connection with such information or any use thereof. RAMXEED assumes no responsibility or liability for any damages whatsoever arising out of or in connection with such information or any use thereof.
Nothing contained in this document shall be construed as granting or conferring any right under any patents, copyrights, or any other intellectual property rights of RAMXEED or any third party by license or otherwise, express or implied. RAMXEED assumes no responsibility or liability for any infringement of any intellectual property rights or other rights of third parties resulting from or in connection with the information contained herein or use thereof.
The products described in this document are designed, developed and manufactured as contemplated for general use including without limitation, ordinary industrial use, general office use, personal use, and household use, but are not designed, developed and manufactured as contemplated (1) for use accompanying fatal risks or dangers that, unless extremely high levels of safety is secured, could lead directly to death, personal injury, severe physical damage or other loss (including, without limitation, use in nuclear facility, aircraft flight control system, air traffic control system, mass transport control system, medical life support system and military application), or (2) for use requiring extremely high level of reliability (including, without limitation, submersible repeater and artificial satellite). RAMXEED shall not be liable for you and/or any third party for any claims or damages arising out of or in connection with above-mentioned uses of the products.
Any semiconductor devices fail or malfunction with some probability. You are responsible for providing adequate designs and safeguards against injury, damage or loss from such failures or malfunctions, by incorporating safety design measures into your facility, equipments and products such as redundancy, fire protection, and prevention of overcurrent levels and other abnormal operating conditions.
The products and technical information described in this document are subject to the Foreign Exchange and Foreign Trade Control Law of Japan, and may be subject to export or import laws or regulations in U.S. or other countries. You are responsible for ensuring compliance with such laws and regulations relating to export or re-export of the products and technical information described herein.
All company names, brand names and trademarks herein are property of their respective owners.