REVISION					
ZONE	REV	DESCRIPTION	DATE	CHANGED BY	APPROVED
	B	ECO-15910	08/20/2026	DMAY	REVANGELIS

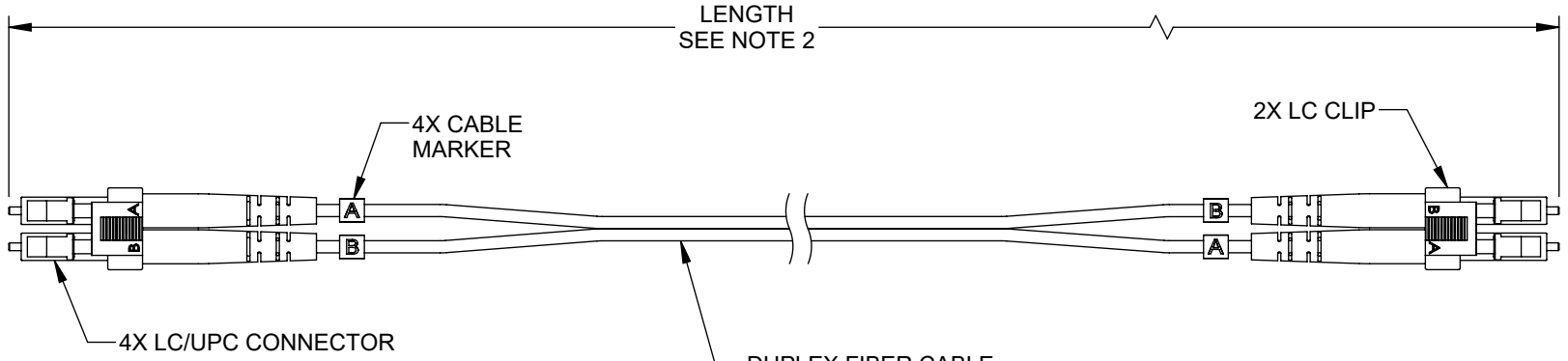

NOTES:

1. ALL CONNECTORS SUPPLIED WITH A DUST CAP INSTALLED (NOT SHOWN).
2. CABLE ASSEMBLY LENGTH DETERMINED BY ITEM PN AND DESCRIPTION.
3. CABLE ASSEMBLY SHALL BE TESTED FOR CONTINUITY.
4. CABLE ASSEMBLY SHALL BE INDIVIDUALLY PACKAGED IAW L-COM SPECIFICATION PS-0031.

THE INFORMATION CONTAINED IN THIS DRAWING IS THE SOLE PROPERTY OF INFINITE ELECTRONICS, INC. ANY REPRODUCTION IN PART OR WHOLE WITHOUT THE WRITTEN PERMISSION OF INFINITE ELECTRONICS, INC. IS PROHIBITED. THESE COMMODITIES, TECHNOLOGY OR SOFTWARE WERE EXPORTED FROM THE UNITED STATES IN ACCORDANCE WITH THE EXPORT ADMINISTRATION REGULATIONS. DIVERSION CONTRARY TO U.S. LAW PROHIBITED.

UNLESS OTHERWISE SPECIFIED
LEADING DIMENSIONS ARE INCHES
DIMENSIONS IN [ ] ARE MILLIMETERS

TOLERANCES:

.X = ±.2 [5]	FRACTIONS
.XX = ±.02 [0.5]	± 1/32
.XXX = ±.005 [0.13]	ANGLES ± 1°

CABLE LENGTH TOLERANCES:
≤12 [305] = +1 [25] / -0
>12 [305] ≤ 60 [1524] = +2 [51] / -0
>60 [1524] ≤ 120 [3048] = +4 [102] / -0
>120 [3048] ≤ 300 [7620] = +6 [152] / -0
>300 [7620] = +5% / -0
CABLE LENGTH TOL IAW IPC A-620

ALL DIMENSIONS ARE FOR REFERENCE ONLY AND SUBJECT TO CHANGE WITHOUT NOTICE.
UN-DIMENSIONED/NON-CRITICAL FEATURES MAY VARY IN SIZE AND LOCATION
COLORS MAY VARY

L-com®
an INFINITE company
Website: www.L-com.com
Phone: 1.800.341.5266 | 1.978.682.6936

INTERPRET ALL DIMENSIONS AND TOLERANCES PER ASME Y14.5

SCALE	SHEET
NONE	1 OF 1

DESCRIPTION

FIBER OPTIC PATCH CABLE LC/UPC TO LC/UPC DUPLEX 50/125 MICRO-METER MULTIMODE OM2 LSZH

SIZE	CAGE CODE	DRAWN BY	ITEM NO.	REV
A	43321	DZINN	FCA-LCLC-DPM2Z	B

LC DS Rev-E Asize