CUI Devices is now Same Sky! Learn More

SERIES: CMS-320928-14X | DESCRIPTION: SPEAKER

FEATURES

- slim profile
- 550 Hz resonant frequency

SPECIFICATIONS

parameter	conditions/description	min	typ	max	units
input power	max power: 1 min. on, 2 min. off, 10 cycles in free air in 1 cc box		 1.0 1.5	 1.2 1.7	 W W
impedance	at 2.8 kHz, 2.0 Vrms	3.2	4.0	4.8	Ω
resonant frequency (Fo)	at 2.0 Vrms, 10 cm	440	550	660	Hz
frequency response		Fo		10,000	Hz
sound pressure level	at 2.0 Vrms, 10 cm, avg at 1.0, 1.2, 1.5, 2.0 kHz	87	90	93	dB
distortion	at 2.0 kHz, 2.0 Vrms, 10 cm			15	%
buzz, rattle, etc.	must be normal at sine wave between 300 Hz~5 kHz			2.0	V
polarity	cone moves forward w/ positive dc current to "+" terminal				
dimensions	32 x 9 x 2.8				mm
magnet	Nd-Fe-B				
frame material	PPA				
cone material	PEEK				
weight	ssolder pads model wire leads model wire leads with connector model	2.48 2.88 2.93	2.75 3.20 3.25	3.03 3.52 3.58	g g g
operating temperature		-25		65	°C
storage temperature		-25		65	°C
hand soldering	for 3~5 seconds (solder pads and wire leads models only)	370	380	390	°C
RoHS	yes				

Notes: 1. All specifications measured at 15~35°C, humidity at 25~75%, under 86~106 kPa pressure, unless otherwise noted.

PART NUMBER KEY

CMS - 320928 - 14 XX

Base Number

Termination Options:
SP = solder pads
L100 = 100 mm wire leads
L100B = 100 mm wire leads with equivalent to Molex 51021-0200 connector

MECHANICAL DRAWING (SOLDER PADS)

units: mm

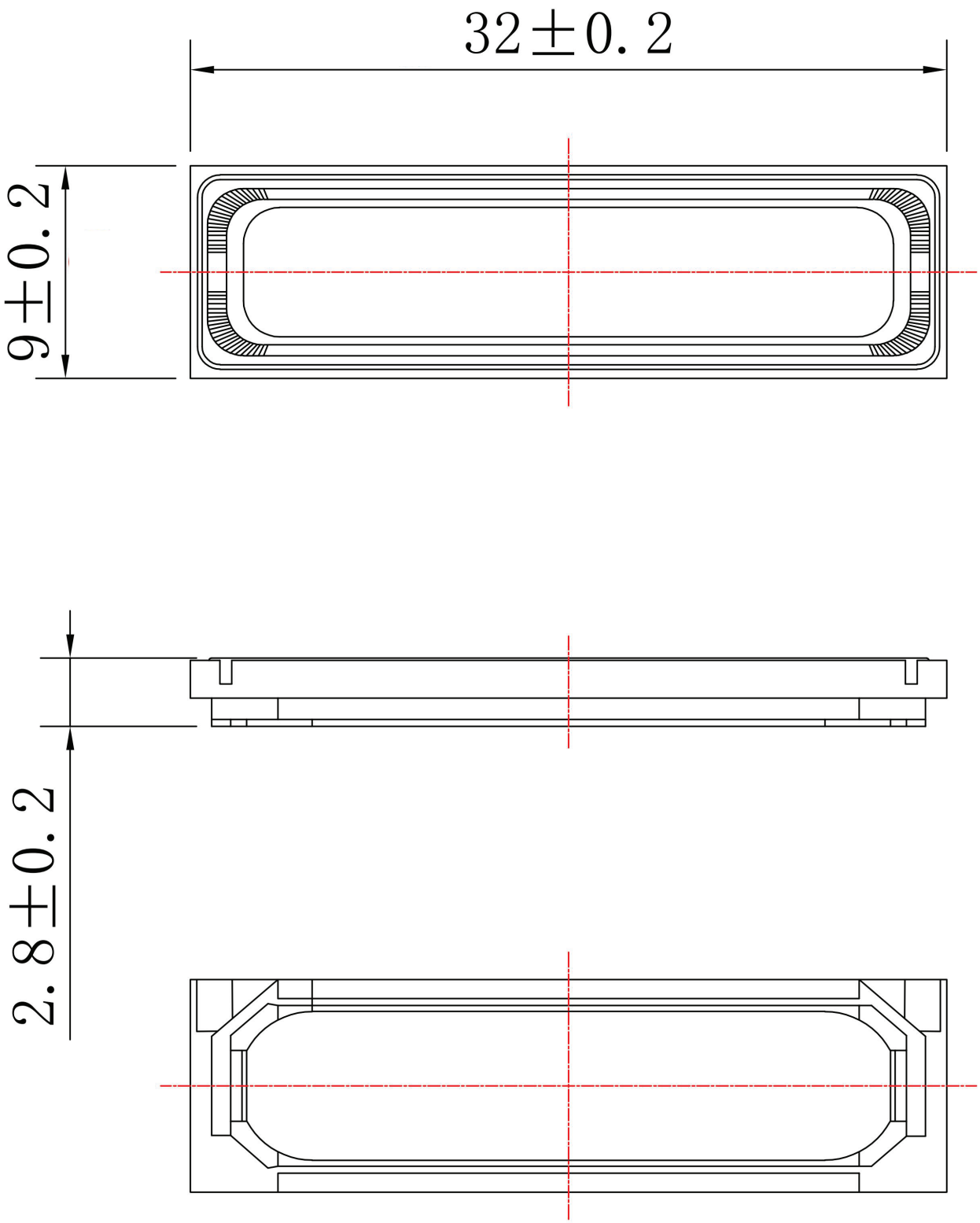

MECHANICAL DRAWING (WIRE LEADS)

units: mm

wire: UL1571 30 AWG

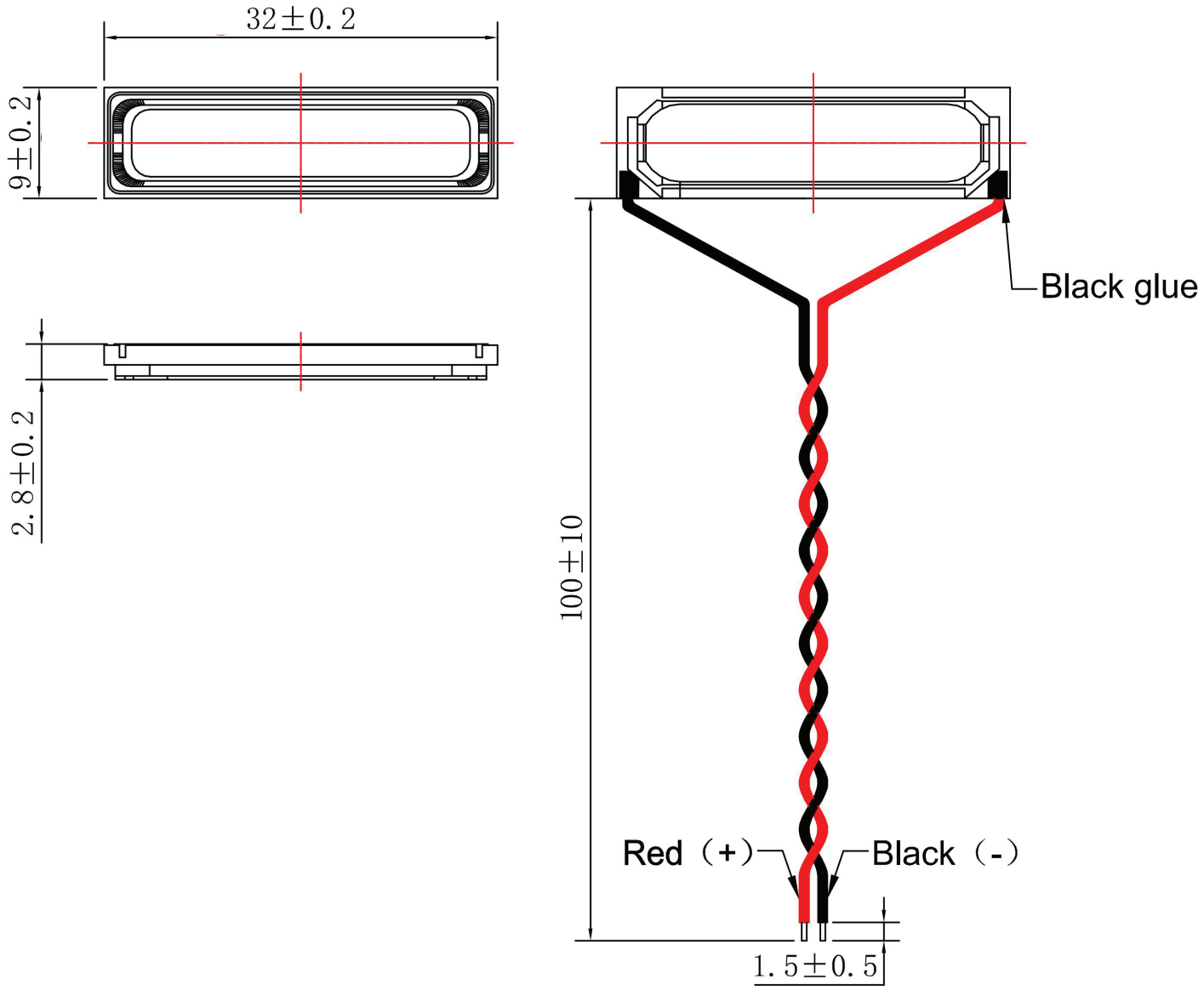

MECHANICAL DRAWING (WIRE LEADS W/ CONNECTOR)

units: mm

wire: UL1571 30 AWG
connector: Equivalent to Molex 51021-0200
mating connector: Molex 53261-0271 or equivalent

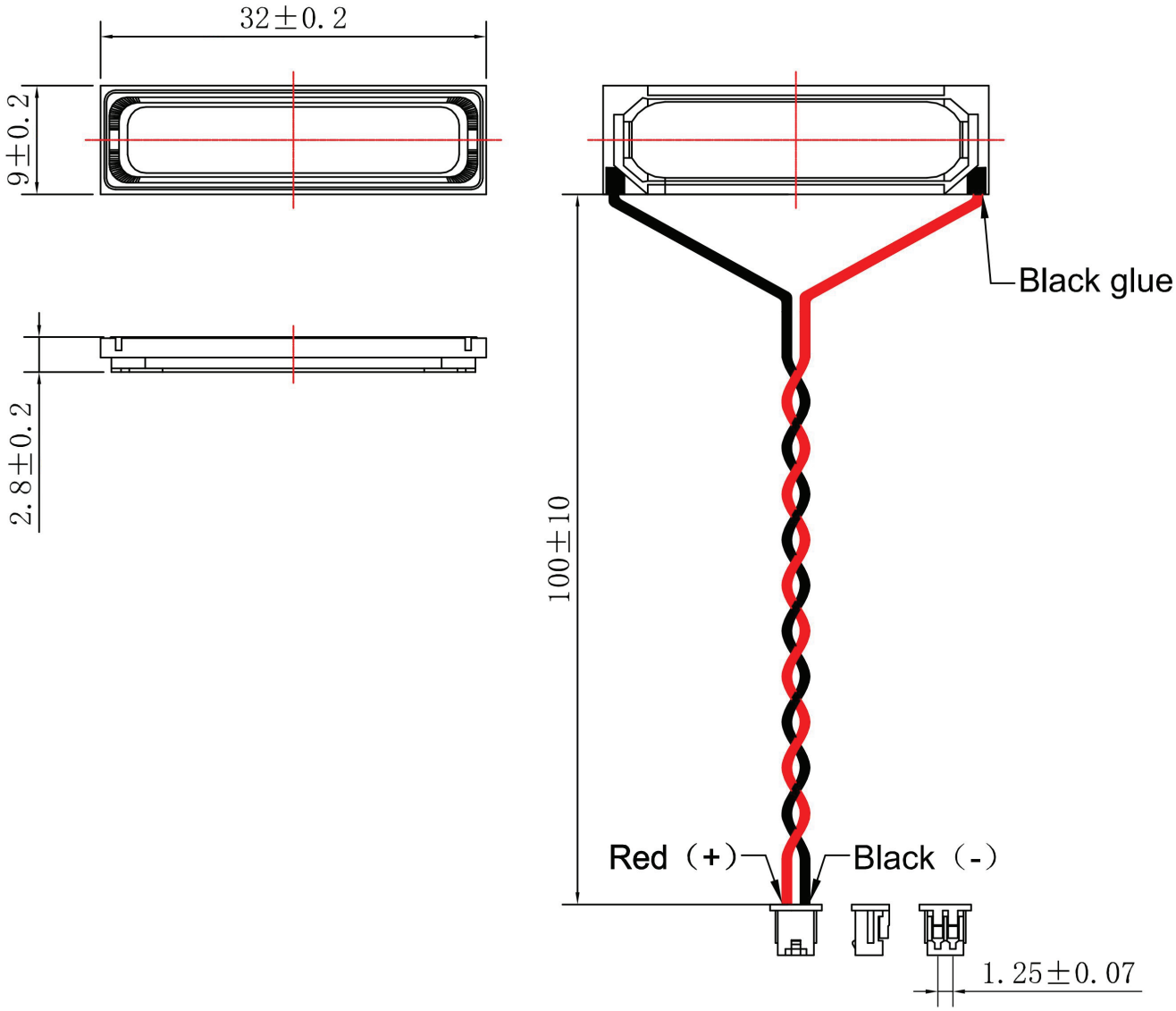

RESPONSE CURVES

Frequency Response Curve

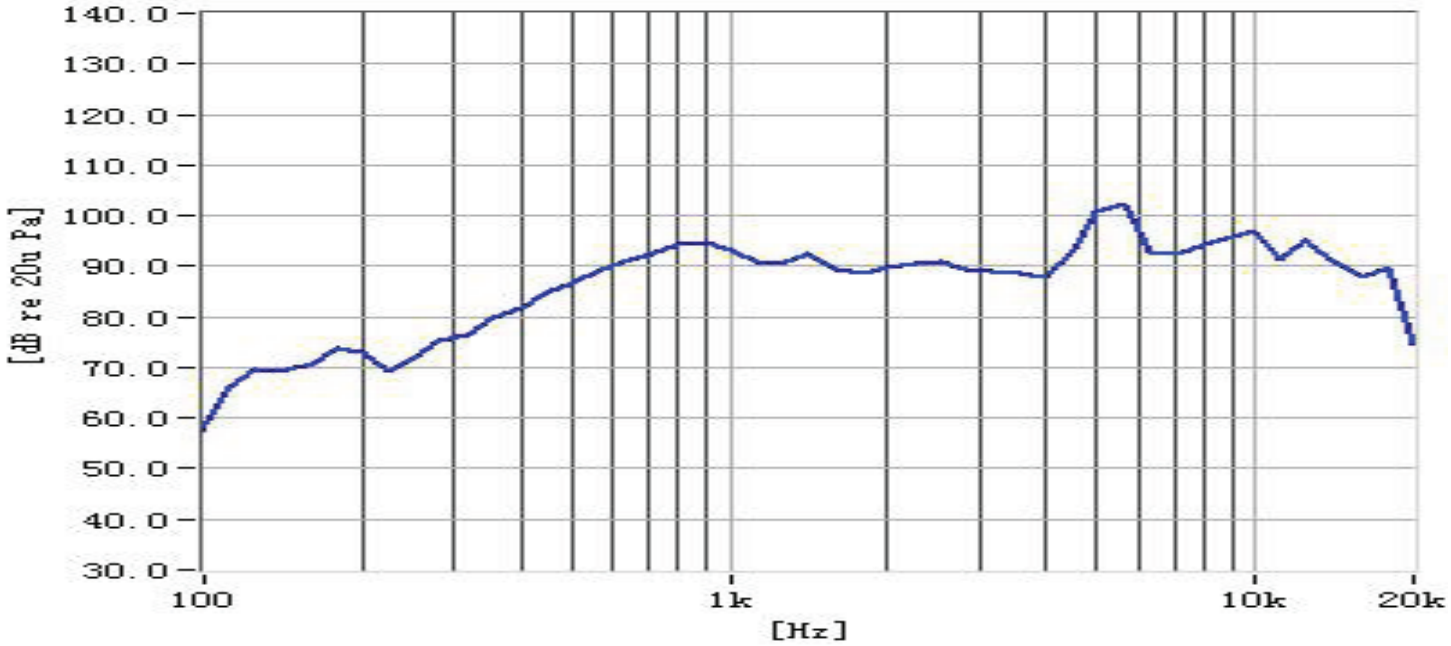

Total Harmonic Distortion Curve

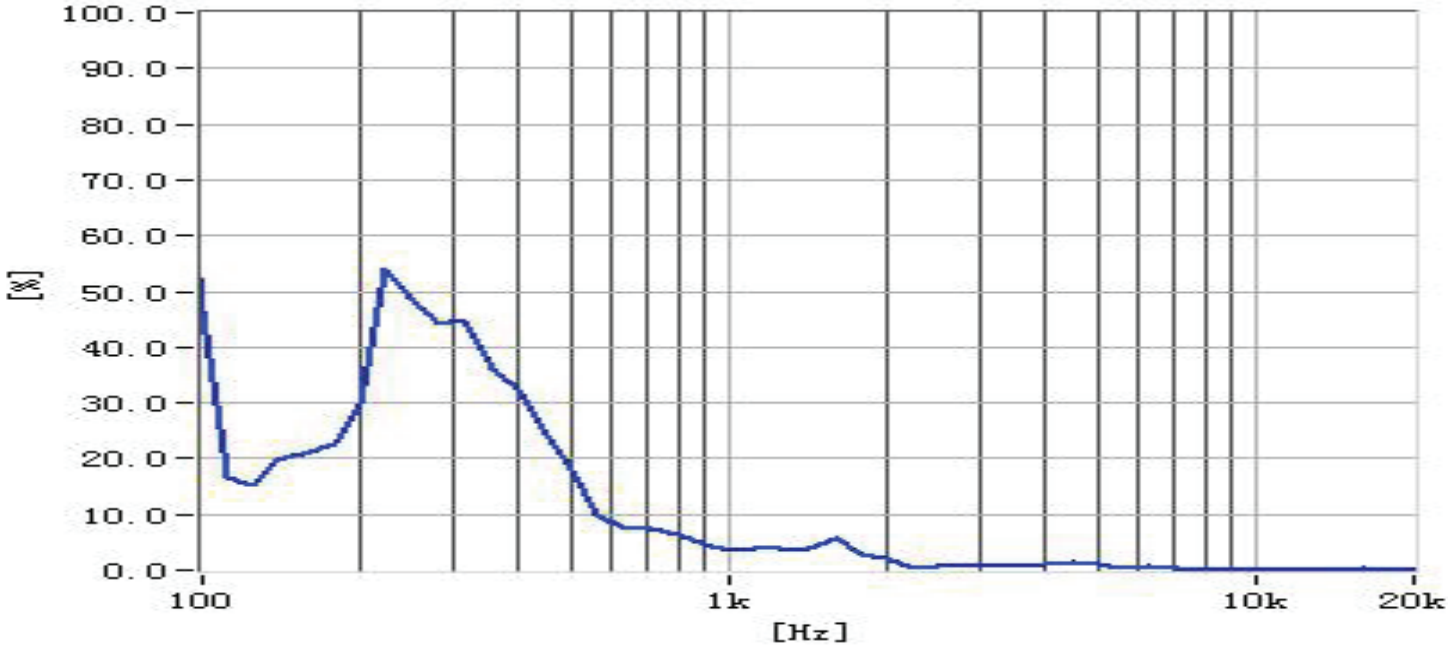

THIELE-SMALL PARAMETERS

parameter	conditions/description	typ
Mechanical Q Factor	Qms	2.140
Electrical Q Factor	Qes	5.544
Total Q Factor	Qts	1.544
Compliance Equivalent Volume	Vas	0.0024

Notes: 2. Results represent typical performance in Free Air conditions.

REVISION HISTORY

rev.	description	date
1.0	initial release	09/09/2026

The revision history provided is for informational purposes only and is believed to be accurate.

Same Sky offers a one (1) year limited warranty. Complete warranty information is listed on our website.

Same Sky reserves the right to make changes to the product at any time without notice. Information provided by Same Sky is believed to be accurate and reliable. However, no responsibility is assumed by Same Sky for its use, nor for any infringements of patents or other rights of third parties which may result from its use.

Same Sky products are not authorized or warranted for use as critical components in equipment that requires an extremely high level of reliability. A critical component is any component of a life support device or system whose failure to perform can be reasonably expected to cause the failure of the life support device or system, or to affect its safety or effectiveness.