CUI Devices is now Same Sky! Learn More

MODEL: CDS-25148 | DESCRIPTION: SPEAKER

FEATURES

- micro-speaker
- small footprint
- rated 1.5 W

RoHS

SPECIFICATIONS

parameter	conditions/description	min	typ	max	units
input power	maximum power: IEC-60268-5, filter 60s on/120s off, 10 cycles at room temp		1.5	2.0	W
impedance	at 1.4 kHz, 1.0 V	6.8	8	9.2	Ω
resonant frequency (Fo)	at 1.0 V	600	750	900	Hz
frequency response	output SPL ±10 dB	Fo		20,000	Hz
sound pressure level	at 1.5 W, 0.1 m ave, at 1.0, 1.2, 1.5, 2.0 kHz at 1.0 W, 1.0 m ave, at 1.0, 1.2, 1.5, 2.0 kHz	91 70	94 73	97 76	dB dB
distortion	at 1.4 kHz, 1.5 W			5	%
buzz, rattle, etc.	must be normal at sine wave between Fo ~ 20 kHz		3.46		V
polarity	cone will move forward with positive dc current to "+" terminal				
dimensions	25 x 14.0 x 4.5				mm
magnet	Nd-Fe-B, Ø6.8 x 1.5				mm
material	ABS UL-94 1/16" HB (black)				
cone material	cloth				
terminal	solder pads				
weight			1.72		g
operating temperature		-20		55	°C
storage temperature		-30		70	°C
RoHS	yes				

Notes: 1. All specifications measured at 5~35°C, humidity at 45~85%, under 86~106kPa pressure, unless otherwise noted.

SOLDERABILITY

parameter	conditions/description	min	typ	max	units
hand soldering	for maximum 3 ±1 seconds	360	370	380	°C

MECHANICAL DRAWING

units: mm
tolerance: ±0.3 mm

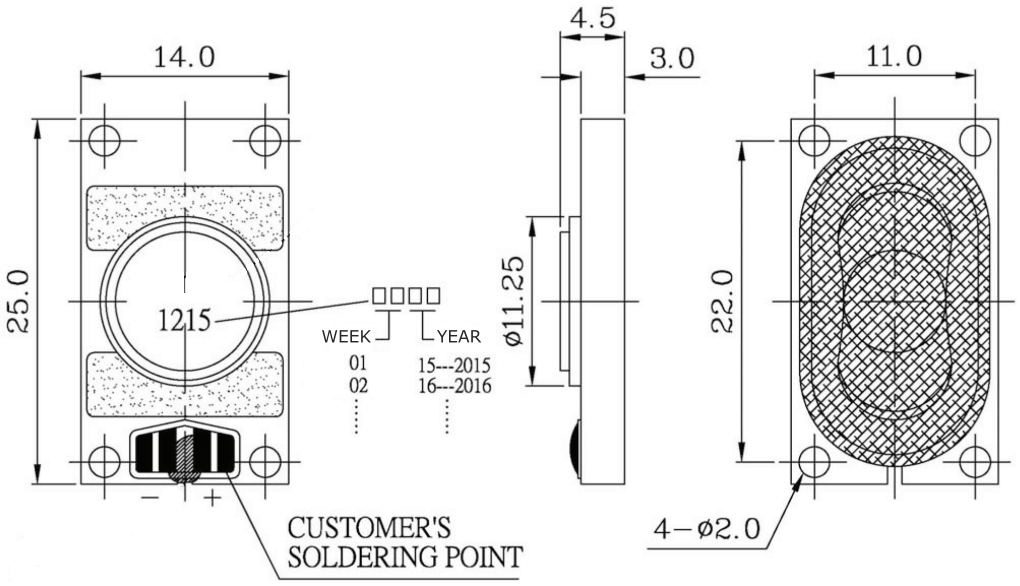

RESPONSE CURVES

Frequency Response Curve (1.5 W, 0.1m)

Frequency Response Curve (1.0 W, 1.0m)

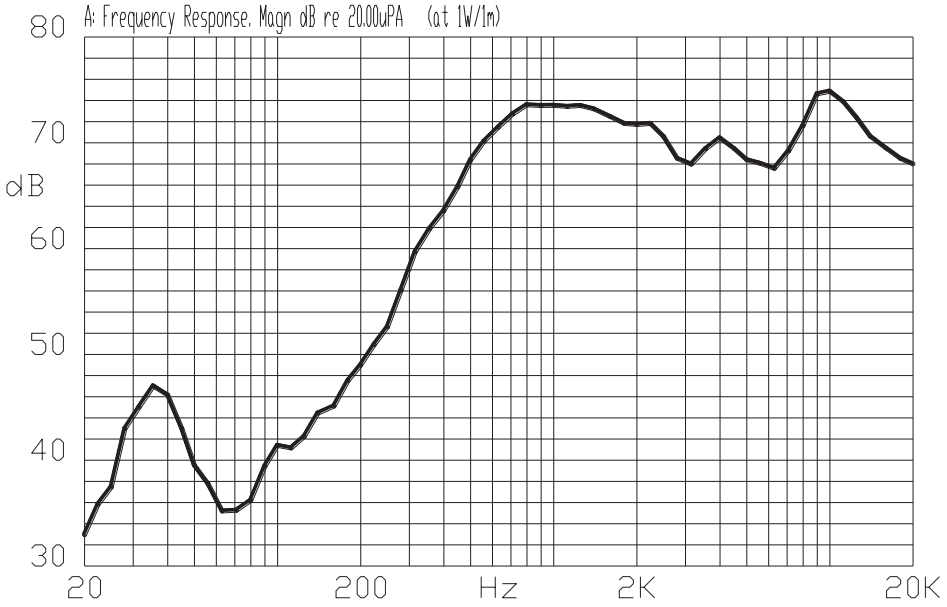

THIELE-SMALL PARAMETERS

parameter	conditions/description	typ
Mechanical Q Factor	Qms	1.743
Electrical Q Factor	Qes	10.252
Total Q Factor	Qts	1.49
Compliance Equivalent Volume	Vas	0.003

Notes: 2. Results represent typical performance in Free Air conditions.

PACKAGING

units: mm

Tray Size: 425 x 245 x 11 mm
Carton Size: 435 x 280 x 220 mm
Tray QTY: 100 pcs per tray
Carton QTY: 2,000 pcs per carton

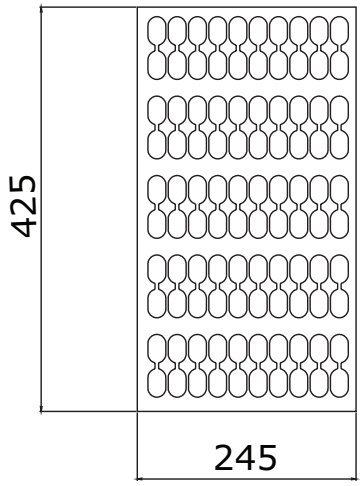

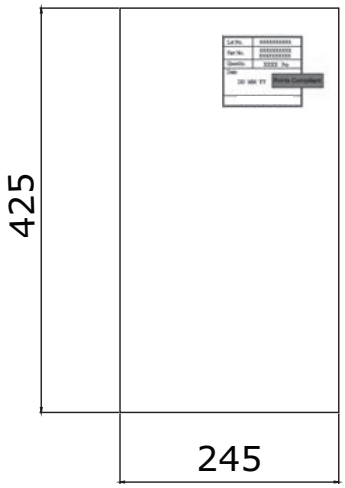

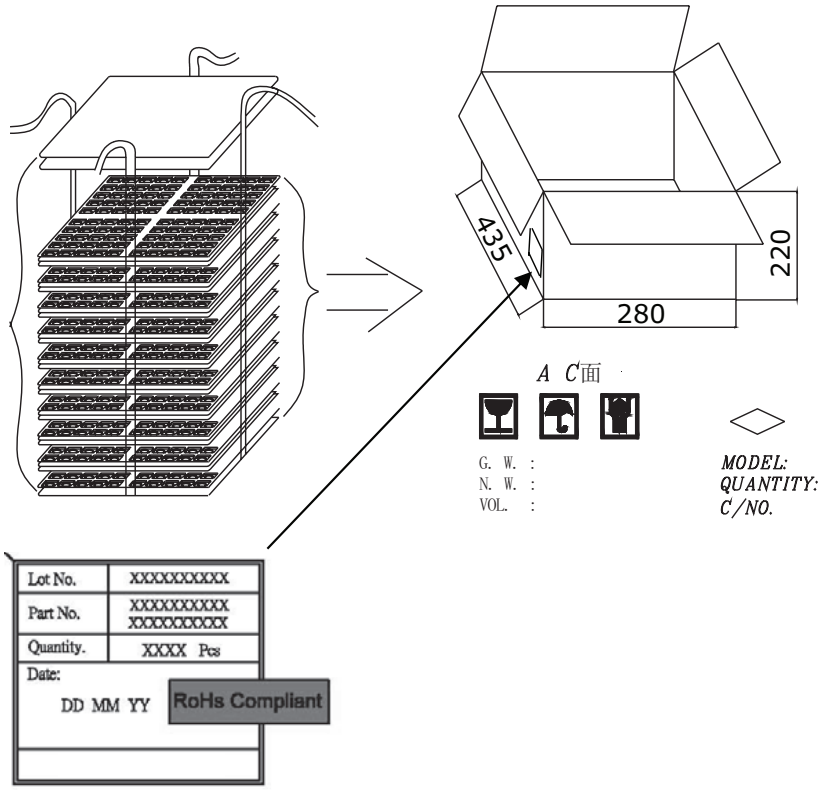

REVISION HISTORY

rev.	description	date
1.0	initial release	04/28/2015
1.01	updated datasheet	07/23/2015
1.02	brand update	01/22/2020
1.03	modified solder pads	12/16/2020
1.04	logo, datasheet style update	08/05/2022
1.05	CUI Devices rebranded to Same Sky	09/11/2024
1.06	added Thiele-Small Parameters	02/26/2025

The revision history provided is for informational purposes only and is believed to be accurate.

Same Sky offers a one (1) year limited warranty. Complete warranty information is listed on our website.

Same Sky reserves the right to make changes to the product at any time without notice. Information provided by Same Sky is believed to be accurate and reliable. However, no responsibility is assumed by Same Sky for its use, nor for any infringements of patents or other rights of third parties which may result from its use.

Same Sky products are not authorized or warranted for use as critical components in equipment that requires an extremely high level of reliability. A critical component is any component of a life support device or system whose failure to perform can be reasonably expected to cause the failure of the life support device or system, or to affect its safety or effectiveness.