COMPONENT	MATERIAL AND FINISH	
BODY, CONTACT, & ANTI-ROCK RING	BeCu, ASTM B196, UNS C17300	GOLD PLATE, MIL-G-45204, TYPE 1, GRADE C, CLASS 1
INSULATORS	PTFE, ASTM D1710, TYPE I, GRADE 1, CLASS A	

PART NO. MMSP-5916

OUTLINE DRAWING

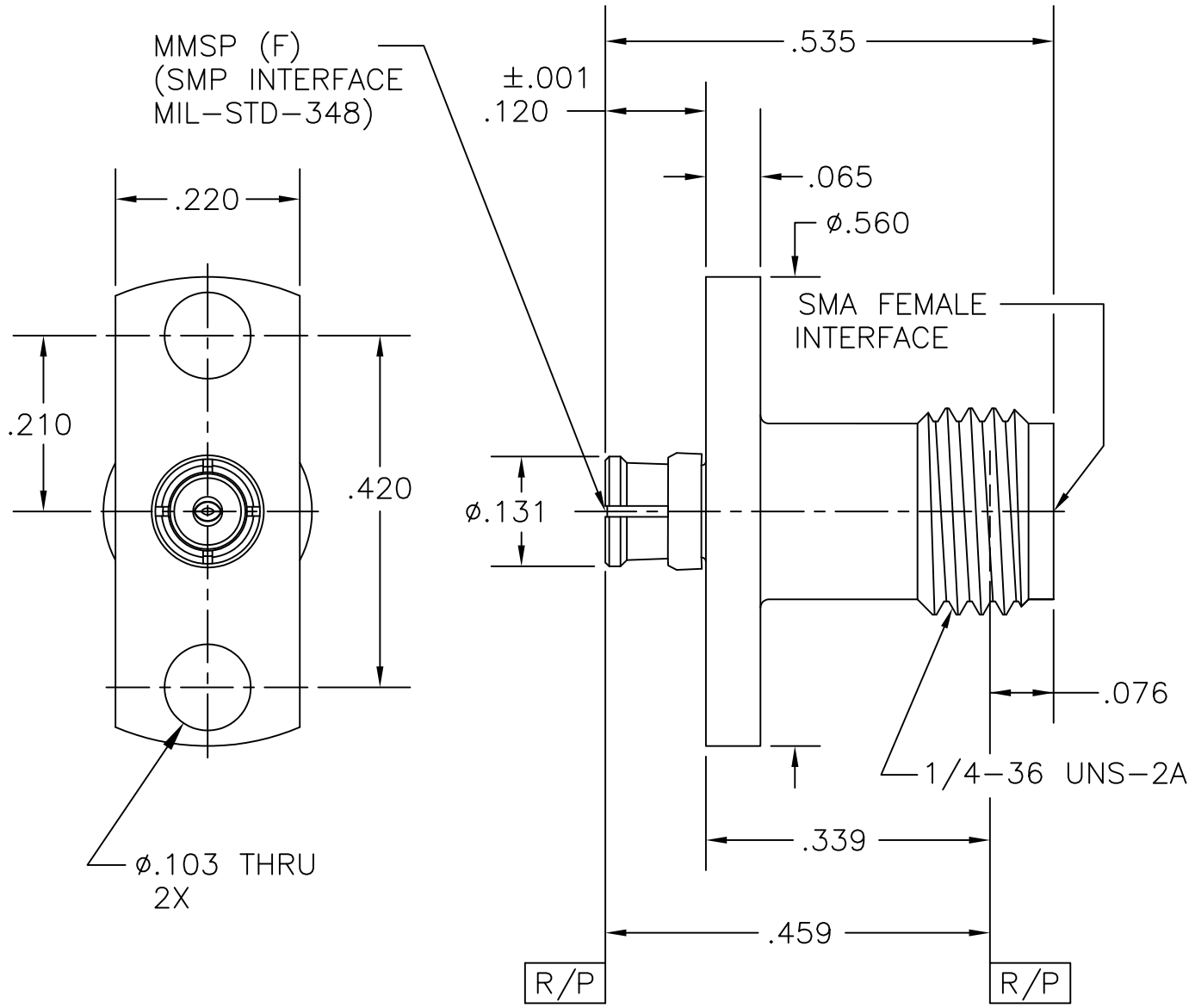

MICRO-MODE PRODUCTS, INC.
The Reliable Connection to the Future

El Cajon, CA 92020
ph 619.449.3844
www.micromode.com

CAGE CODE 15907

ASSY PROCEDURES: N/A

INSERTION/EXTRACTION TOOL: N/A

MMSP (F) TO SMA (F) ADAPTER, 2 HOLE FLANGE MOUNT

PART NO. MADP-5916

REVISION F

SHEET 1 OF 1 | OL5916 4-1-03 RF MP