OUTLINE DRAWING | PART NO. MSSP-10065

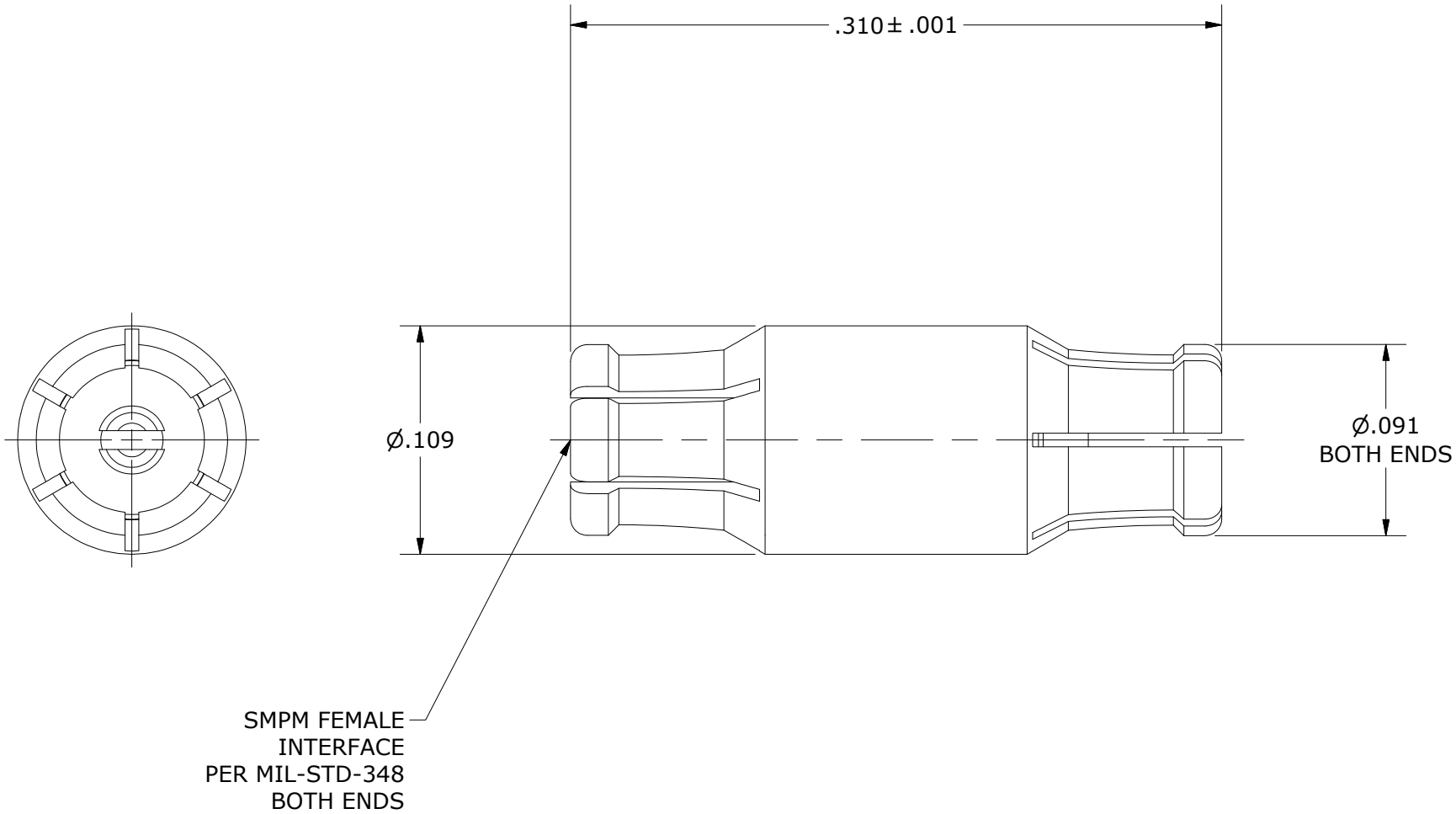

COMPONENT	MATERIAL	FINISH
BODY & CONTACT	BeCu, ASTM B196, UNS C17300	GOLD PLATE, MIL-DTL-45204, TYPE I, GRADE C, CLASS 1
INSULATOR	PTFE PER ASTM D1710 TYPE 1, GRADE 1, CLASS A	

MICRO-MODE PRODUCTS, INC.
The Reliable Connection to the Future

El Cajon, CA 92020
ph 619.449.3844
www.micromode.com

CAGE CODE 15907

ASSEMBLY PROCEDURES: N/A

TOOL: MMTL-6460

SHEET 1 OF 1 | 5-1-09 | MP | MD

SMPM FEMALE BLINDMATE INTERCONNECT, .310 OAL

PART NO. MSSP-10065

REVISION B