# SNAP HIGH-DENSITY DIGITAL MODULES

## Features

- 16 or 32 digital input points or output points in one compact SNAP module
- Up to 16 high-density digital modules on a SNAP rack, making up to 512 digital points available on one rack
- Convenient pluggable wiring harness, breakout boards, and header cables (available separately)
- 1500 V of isolation protects sensitive control electronics from industrial field signals
- Rugged packaging

**SNAP-IDC-32 high-density digital input module**

## DESCRIPTION

SNAP high-density digital (HDD) modules from Opto 22 provide 16 or 32 digital input or output points in one compact SNAP module. All HDD modules work with the SNAP PAC System, which consists of SNAP PAC controllers and brains, SNAP PAC racks, SNAP I/O modules, and PAC Project software. These modules can also be used in intelligent remote I/O for Allen-Bradley® Logix PLC systems.

SNAP high-density digital modules are ideal for OEMs and for anyone who has high point-count applications. The high-density point configuration reduces per-point costs of digital I/O systems by providing up to eight times as many I/O points in the same space.

The following high-density digital modules are available:

- The **SNAP-IDC-32** digital input module, with 32 input points, can be used to sense on/off status for 10–32 VDC inputs from sources such as proximity switches, limit switches, push buttons, and pilot switches (PNP or sourcing type).
- The **SNAP-IDC-32N** is similar, but its input range is -10 to -32 VDC and its common connections are positive rather than negative, making it ideal for NPN or sinking type inputs.
- The **SNAP-IDC-32D** has an input range of 2.5 to 12 VDC.
- The **SNAP-IDC-32DN** offers a -2.5 to -12 VDC input range and has positive common connections, also suited to NPN (sinking) inputs.
- The **SNAP-IDC-16** digital input module offers 16 points with channel-to-channel isolation. It can sense on/off status for 10–32 VDC/VAC loads.
- The **SNAP-IDC-HT-16** leakage tolerant digital input module is used with proximity switches. It offers channel-to-channel isolation for 16 points and senses on/off status for loads of 15–28 VDC/VAC.
- **SNAP-IAC-16**, **SNAP-IAC-A-16 (Obsolete)**, and **SNAP-IAC-K-16 (Obsolete)** digital input modules each have 16 points with

## Part Numbers

| Part | Description |
|---|---|
| SNAP-IDC-32 | SNAP 32-point digital input module, 10–32 VDC |
| SNAP-IDC-32N | SNAP 32-point digital input module, -10 to -32 VDC, with positive common connection |
| SNAP-IDC-32D | SNAP 32-point digital input module, 2.5 to 12 VDC |
| SNAP-IDC-32DN | SNAP 32-point digital input module, -2.5 to -12 VDC, with positive common connection |
| SNAP-IDC-16 | SNAP isolated 16-point digital input module, 10–32 VDC/VAC |
| SNAP-IDC-HT-16 | SNAP leakage-tolerant isolated 16-point digital input module, 15–28 VDC/VAC |
| SNAP-IAC-16 | SNAP isolated 16-point digital input module, 90–140 VAC/VDC |
| SNAP-IAC-A-16 (Obsolete) | SNAP isolated 16-point digital input module, 180–280 VAC/VDC |
| SNAP-IAC-K-16 (Obsolete) | SNAP isolated 16-point digital input module, 70–130 VAC/VDC |
| SNAP-ODC-32-SRC | SNAP 32-point digital output module, 5–60 VDC load sourcing |
| SNAP-ODC-32-SNK | SNAP 32-point digital output module, 5–60 VDC load sinking |
| Accessories | |
| OPTOTERMINAL-G20 | Terminal with operator controls for use with SNAP high-density digital mod-ules |



© 2006–2026 Opto 22. All rights reserved. Dimensions and specifications are subject to change. Brand or product names used herein are trademarks or registered trademarks of their respective companies or organizations.

channel-to-channel isolation. These modules sense on/off status for 90–140 VAC (SNAP-IAC-16), 180–280 VAC (SNAP-IAC-A-16, Obsolete), or 70–130 VAC (SNAP-IAC-K-16, Obsolete).

- **SNAP-ODC-32-SRC and SNAP-ODC-32-SNK** digital output modules have 32 points and can switch on and off 5–60 VDC loads, either sourcing or sinking.

All HDD input modules feature automatic counting and latching. DC models are ideal for detecting low-voltage auxiliary contacts.

## Mounting Racks

SNAP high-density digital modules are designed to work with SNAP PAC mounting racks. Up to 16 modules can be mounted on a rack, making up to 512 digital points available. In addition, HDD modules can be mixed with 4-channel SNAP digital, analog, and serial modules on the same rack.

SNAP racks have a retention rail locking system. Use two 4-40 by ½-inch standard machine screws to hold each module securely in position on the SNAP rack.

## Wiring Aids: Breakout Boards, Wiring Harnesses, and Header Cables

Due to space constraints, instead of using the usual removable terminal connectors, high-density digital modules use other wiring devices. These cables and breakout boards are available separately and are detailed in form 1756, SNAP TEX Cables and Breakout Boards Data Sheet available on our website.

SNAP breakout boards for high-density digital modules provide LED indicators as well as labeled and easily accessible fused connectors for input or output points, all of which simplify connecting field devices to HDD modules.

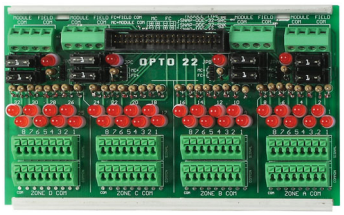

**SNAP-IDC-HDB breakout board**

For a table showing compatible boards, cables, and modules, see form 1756, SNAP TEX Cables and Breakout Boards Data Sheet.

If you are not using breakout boards, you can connect 16-point input modules directly to field devices or terminal strips using the **SNAP-HD-ACF6** wiring harness assembly.

The assembly has two 8-point connectors that plug securely into the top of the module and provide flying leads at the field end.

Similarly, 32-point modules can connect to field devices with the **SNAP-HD-CBF6** wiring harness, which plugs into the top of the module and provides flying leads.

## SNAP Product Compatibility

SNAP HDD modules are part of the SNAP PAC System and can be used on SNAP PAC mounting racks with SNAP PAC R-series controllers and SNAP PAC EB and SB brains. These modules can be used with both standard wired Ethernet controllers and brains and with Wired+Wireless™ models.

Other digital, analog, and serial SNAP I/O modules can be placed on the same rack with HDD modules for the mix of signals required at any location.

*NOTE: To use HDD modules in older systems, see form 1688, SNAP PAC System Migration Technical Note.*

## Programming

Opto 22 PAC Control software version 8.0 or newer is required for SNAP high-density digital modules used with a SNAP PAC controller. SNAP HDD modules can also be accessed by an EtherNet/IP or Modbus/TCP system or by custom software built with the OptoMMP Communication Toolkit.

See form 1547, SNAP High-Density Digital Modules User's Guide for detailed information on using these modules in a PAC Control strategy. The OptoMMP Communication Toolkit is documented in form 1465, *OptoMMP Protocol Guide*. Communication with A-B PLC systems is covered in form 1770, *EtherNet/IP for SNAP PAC Protocol Guide*. For Modbus/TCP systems, see form 1678, *Modbus/TCP Protocol Guide*.

## OptoTerminal-G20

SNAP high-density digital modules have a diagnostic port for commissioning and troubleshooting using the optional **OptoTerminal-G20** operator interface terminal. The OptoTerminal-G20 displays the status of a high-density digital module's points on a two-line LCD display and can also be used to turn output points on and off.

See form 1547, SNAP High-Density Digital Modules User's Guide for detailed information.



© 2006–2026 Opto 22. All rights reserved. Dimensions and specifications are subject to change. Brand or product names used herein are trademarks or registered trademarks of their respective companies or organizations.

## Connecting to G4 Digital I/O

Some 32-channel HDD modules can connect to older G4 and G1 mounting racks, using a special cable, to integrate older G4 digital I/O systems with modern PAC Project software and SNAP Ethernet-based controllers. For outputs, this connection makes available the G4 module's 3-amp switching capability, which provides twelve times the 0.25 amp capability per point of the high-density digital modules themselves.

These HDD modules and cables also work with some G1 racks, and the SNAP-HD-G4F6 works with some integrated I/O racks.

For more information, see form 1756, SNAP TEX Cables and Breakout Boards Data Sheet.

### Outputs

Connect SNAP-ODC-32-SNK digital output modules to G4PB16H and G4PB16HC mounting racks using the **SNAP-HD-G4F6** header cable.

- Do not use SNAP-ODC-32-SRC modules with G4 digital.
- All G4 modules on the G4 mounting rack must be outputs and must be the same logic voltage (5, 15, or 24 VDC).

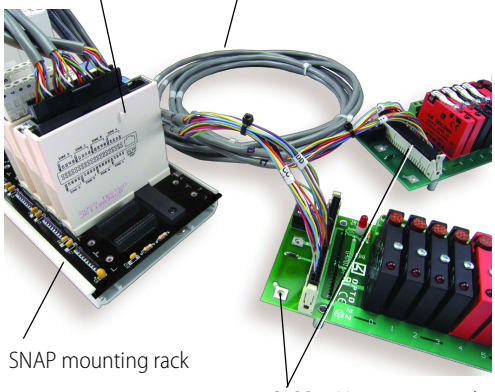


### Inputs

SNAP-IDC-32N and SNAP-IDC-32DN digital input modules can connect to G4PB16H and G4PB16HC mounting racks using the **SNAP-HD-G4F6N** header cable.

- All G4 modules on the G4 mounting rack must be inputs and must be the same logic voltage (5, 15, or 24 VDC).
- For 5 volt G4 modules, use the SNAP-IDC-32DN.
- For 15 or 24 volt G4 modules, use the SNAP-IDC-32N.

*NOTE: While not designed for this use, it is possible to connect the SNAP-IDC-32 module with G4 15 or 24 V inputs using a SNAP-HD-G4F6 cable. However, the SNAP-IDC-32 uses positive-true logic and therefore returns the inverse of the typical negative-true logic. For example, if the SNAP-IDC-32 is controlled by a PAC Control strategy, an "OFF" state from it actually indicates that the associated G4 module is turned ON.*

## COMPARING SNAP DIGITAL MODULES

**IMPORTANT:** SNAP high-density digital modules differ from each other and from 4-channel SNAP digital modules in several critical areas, including electrical capabilities and I/O performance.

You must consider these differences when deciding which SNAP digital module to use for an application. For example, while a SNAP-IDC-32 digital input module provides 32 I/O points on one module, it does not provide the channel-to-channel isolation of a SNAP-IDC-16 with 16 channels or a SNAP-IDC5 with 4. See the table "Comparing SNAP High-Density and 4-Channel Digital Modules" on page 4 for a comparison of capabilities.

### Counting

Digital counting is an important area in which HDD input modules differ from 4-channel SNAP digital input modules. Opto 22 has traditionally provided counting capability for any digital input point when used with a brain that supports high-speed digital features. This counting happens in the brain, not in the module.

SNAP high-density digital modules introduce a different kind of counting, where the counting occurs on the module itself. While the module uses a 16-bit counter (counting only to 65,535), the I/O processor used with the module accumulates counts to 32 bits by periodically getting and clearing the module's counts, and adding each new count to what it already has for that point. However, this is not high-speed counting because it is done on the module, and both the HDD module's speed and communication speed between the brain and the module are limited. Note that counting speed on HDD modules is not deterministic and will vary.

However, this slower counting rate works well for many applications that involve counting at slower speeds—for example, rotating shafts, flow meters with pulsed outputs, and electrical meters tuned to slower speeds.



© 2006–2026 Opto 22. All rights reserved. Dimensions and specifications are subject to change. Brand or product names used herein are trademarks or registered trademarks of their respective companies or organizations.

## Comparing SNAP High-Density and 4-Channel Digital Modules

| Item | SNAP High-Density Digital Modules | 4-Channel SNAP Digital Modules |
|---|---|---|
| Number of points on module | 16 or 32, depending on module | 4 |
| Isolation and fusing | **16-point input modules:** Each point is optically isolated from other points on the module.<br>**32-point input and output modules:** The module is divided into four groups of eight points. Groups are isolated from each other, but points within a group are not isolated from each other. Groups must be externally fused. | **Input modules:** Each point is optically isolated from other points on the module.<br>**Most output modules:** Points are not isolated from each other. Points share a common fuse. For isolated modules, see form 1144, *SNAP Digital Output Modules Data Sheet*. |
| Status LEDs | None; use the handheld OptoTerminal-G20 for module diagnostics and commissioning, or for 32-point modules, connect to an optional breakout rack. | One for each point, located on top of module. |
| Polling time from I/O processor to module[1] | 2–30 ms typical[2] | 0.5–2 ms typical[2] |
| Module turn-on/off time[1] | 16-point input modules: 15–20 ms<br>32-point input modules: 6 ms<br>Output modules: 100 microseconds | Varies by module. Examples:<br>• SNAP-IDC5-FAST: 25 microseconds<br>• SNAP-IDC5: 5 ms turn-on, 15 ms turn-off |
| On/off status | Yes | Yes |
| Input latching | Yes | Yes |
| Counting on digital input modules | Counting occurs on the module.[3]<br>Counting is available with SNAP-PAC-R1[4], SNAP-PAC-EB1[5], and SNAP-PAC-SB1 processors.<br>Counting speeds:<br>On 32-point modules, 0–50 Hz @ 50% duty cycle<br>On 16-point modules, 0–25 Hz @ 50% duty cycle (Speed depends on module; see specifications for each part number.) | High-speed counting occurs on the I/O processor (brain or on-the-rack controller) and can be configured for any point. (High-speed counting is available on SNAP-PAC-R1[4], SNAP-PAC-EB1[5], and SNAP-PAC-SB1 processors.) Counting speed varies based on the processor and the speed of the module. |
| Watchdog timer | Firmware 8.1 and higher, yes.<br>Firmware 8.0 and lower, no. | Yes |
| Pulse generation | Yes | Yes |
| On-pulse, off-pulse, and period measurement | No | Yes |
| Frequency | No | Yes |
| Totalizer | No | Yes |
| Digital events | Firmware 8.1 and higher, yes.<br>Firmware 8.0 and lower, no. | Yes |

1 Actual turn-on and turn-off times equal the polling time plus the module time.
2 Polling time varies based on the SNAP I/O processor (brain or on-the-rack controller), processor configuration, and Ethernet host communication activity.
3 The high-density digital module uses a 16-bit counter, but the processor used with the module accumulates counts to 32 bits by periodically getting and clearing the module's counts and adding to current values. Update time varies based on number of modules and Ethernet communication demands.
4 Including the SNAP-PAC-R1-B.
5 OBSOLETE product, please contact Pre-Sales Engineering for more information.



© 2006–2026 Opto 22. All rights reserved. Dimensions and specifications are subject to change. Brand or product names used herein are trademarks or registered trademarks of their respective companies or organizations.

## SPECIFICATIONS

| | SNAP-IDC-32 | SNAP-IDC-32N | SNAP-IDC-32D | SNAP-IDC-32DN |
|---|---|---|---|---|
| Input Range | 10 to 32 VDC | -10 to -32 VDC | 2.5 to 12 VDC | -2.5 to -12 VDC |
| Nominal Voltage Range | 24 VDC | -12 to -24 VDC | 2.5 VDC | -2.5 VDC |
| Input Resistance | 20 K ohms | 20 K ohms | 3 K ohms | 3 K ohms |
| Logic Voltage and Current | 5 VDC ± 0.1 @ 150 mA | | 5 VDC ± 0.1 @ 150 mA | |
| Maximum Operating Common Mode Voltage | 250 V | 250 V | 250 V | 250 V |
| Isolation: Field to Logic | 1500 V | 1500 V | 1500 V | 1500 V |
| Input Arrangement | 32 input channels; 4 groups of 8 inputs each | | 32 input channels; 4 groups of 8 inputs each | |
| Common connection | Points in each group share a common **negative** connection. | Points in each group share a common **positive** connection. | Points in each group share a common **negative** connection. | Points in each group share a common **positive** connection. |
| Channel-to-Channel Isolation | No channel-to-channel isolation; 100 V group-to-group isolation | | No channel-to-channel isolation; 100 V group-to-group isolation | |
| Hold-down screws<br>Connector screws | Torque: Not to exceed 1 in-lb (0.11 N-m)<br>Torque: 5.22 in-lb (0.59 N-m) | | Torque: Not to exceed 1 in-lb (0.11 N-m)<br>Torque: 5.26 in-lb (0.59 N-m) | |
| Maximum Number of HDD Modules on One Mounting Rack | 16 | 16 | 16 | 16 |
| Indicators | None; use optional OptoTerminal-G20 diagnostic display or breakout rack. | | | |
| ON Voltage | 10 VDC @ 0.5 mA | -10 VDC @ 0.5 mA | 2.5 VDC @ 0.5 mA | -2.5 VDC @ 0.5 mA |
| OFF Voltage | 3 VDC @ 0.1 mA | -3 VDC @ 0.1 mA | 1 VDC @ 0.1 mA | -1 VDC @ 0.1 mA |
| Polling time from I/O processor to module[1] | 2–30 ms typical[2] | 2–30 ms typical[2] | 2–30 ms typical[2] | 2–30 ms typical[2] |
| Input Turn-On/Off Time | 6 ms | 6 ms | 6 ms | 6 ms |
| Counting Frequency (DC input) | 0–50 Hz @ 50% duty cycle | 0–50 Hz @ 50% duty cycle | 0–50 Hz @ 50% duty cycle | 0–50 Hz @ 50% duty cycle |
| Operating Temperature | -20 to 70 °C | -20 to 70 °C | -20 to 70 °C | -20 to 70 °C |
| Storage Temperature | -40 to 85 °C | -40 to 85 °C | -40 to 85 °C | -40 to 85 °C |
| Agency Approvals | UL, CE, RoHS, DFARS; UKCA | CE, RoHS, DFARS | CE, RoHS, DFARS | CE, RoHS, DFARS |
| Warranty | Lifetime | Lifetime | Lifetime | Lifetime |

1 Affects turn-on and turn-off determination
2 Time varies based on the SNAP PAC I/O processor (brain or on-the-rack controller), processor configuration, and Ethernet host communication activity.



© 2006–2026 Opto 22. All rights reserved. Dimensions and specifications are subject to change. Brand or product names used herein are trademarks or registered trademarks of their respective companies or organizations.

## SPECIFICATIONS (CONTINUED)

| | SNAP-IDC-16 | SNAP-IDC-HT-16 | SNAP-IAC-16 | SNAP-IAC-A-16 (Obsolete) | SNAP-IAC-K-16 (Obsolete) |
|---|---|---|---|---|---|
| Input Range | 10–32 VDC/VAC | 15–28 VDC/VAC | 90–140 VAC/VDC | 180–280 VAC/VDC | 70–130 VAC/VDC |
| Nominal Voltage Range | 24 VDC | 24 VDC | 120 VAC | 240 VAC | 100 VAC |
| Input Resistance | 44 K ohms | 4 K ohms | 300 K ohms | 940 K ohms | 220 K ohms |
| Logic Voltage and Current | 5 VDC ± 0.1 @ 150 mA | 5 VDC ± 0.1 @ 150 mA | 5 VDC ± 0.1 @ 150 mA | 5 VDC ± 0.1 @ 150 mA | 5 VDC ± 0.1 @ 150 mA |
| Input Arrangement | 16 isolated input channels | | 16 isolated input channels | | |
| Channel-to-Channel Isolation | 250 V steady-state, 1500 V transient | | 250 V steady-state, 1500 V transient | | |
| Maximum Operating Common Mode Voltage | 250 V | 250 V | 250 V | 250 V | 250 V |
| Isolation: Field to Logic | 1500 V | 1500 V | 1500 V | 1500 V | 1500 V |
| Maximum Number of HDD Modules on One Mounting Rack | 16 | 16 | 16 | 16 | 16 |
| Indicators | None; use optional OptoTerminal-G20 diagnostic display. | | None; use optional OptoTerminal-G20 diagnostic display. | | |
| ON Voltage | 10 VDC @ 0.230 mA | 15 VDC @ 3.50 mA | 90 VAC/VDC @ 0.3 mA | 180 VAC/VDC @ 0.191 mA | 70 VAC/VDC @ 0.3 mA |
| OFF Voltage | 3 VDC @ 0.05 mA | 9 VDC @ 2.0 mA | 40 VAC/VDC @ 0.135 mA | 40 VAC/VDC @ 0.043 mA | 30 VAC/VDC @ 0.135 mA |
| Torque, hold-down screws | Not to exceed 1 in-lb (0.11 N-m) | Not to exceed 1 in-lb (0.11 N-m) | Not to exceed 1 in-lb (0.11 N-m) | Not to exceed 1 in-lb (0.11 N-m) | Not to exceed 1 in-lb (0.11 N-m) |
| Torque, connector screws | 5.22 in-lb (0.59 N-m) | 5.22 in-lb (0.59 N-m) | 5.22 in-lb (0.59 N-m) | 5.22 in-lb (0.59 N-m) | 5.22 in-lb (0.59 N-m) |
| Polling time from I/O processor to module[1] | 2–30 ms typical[2] | 2–30 ms typical[2] | 2–30 ms typical[2] | 2–30 ms typical[2] | 2–30 ms typical[2] |
| Input Turn-On/Off Time | 15 ms turn-on time 20 ms turn-off time | 20 ms turn-on time 25 ms turn-off time | 15 ms turn-on time 20 ms turn-off time | 15 ms turn-on time 20 ms turn-off time | 15 ms turn-on time 20 ms turn-off time |
| Counting Frequency (DC input) | 0–25 Hz @ 50% duty cycle | 0–15 Hz @ 50% duty cycle | 0–25 Hz @ 50% duty cycle | 0–25 Hz @ 50% duty cycle | 0–25 Hz @ 50% duty cycle |
| Operating Temperature | -20 to 70 °C | -20 to 70 °C | -20 to 70 °C | -20 to 70 °C | -20 to 70 °C |
| Storage Temperature | -40 to 85 °C | -40 to 85 °C | -40 to 85 °C | -40 to 85 °C | -40 to 85 °C |
| Agency Approvals | UL, CE, RoHS, DFARS; UKCA | CE, RoHS, DFARS | UL, CE, RoHS, DFARS; UKCA | UL, CE, RoHS, DFARS; UKCA | CE, RoHS, DFARS |
| Warranty | Lifetime | Lifetime | Lifetime | Lifetime | Lifetime |

1 Affects turn-on and turn-off determination
2 Time varies based on the SNAP PAC I/O processor (brain or on-the-rack controller), processor configuration, and Ethernet host communication activity.



© 2006–2026 Opto 22. All rights reserved. Dimensions and specifications are subject to change. Brand or product names used herein are trademarks or registered trademarks of their respective companies or organizations.

## SPECIFICATIONS (CONTINUED)

| | SNAP-ODC-32-SRC | SNAP-ODC-32-SNK |
|---|---|---|
| Switching Voltage | 5–60 VDC | 5–60 VDC |
| Nominal Switching Voltage | 12–24 VDC | 12–24 VDC |
| Logic Voltage and Current | 5 VDC ± 0.1 @ 150 mA | 5 VDC ± 0.1 @ 150 mA |
| Maximum Off State Voltage | 60 VDC | 60 VDC |
| Output Leakage, Typical | <10 microamps per channel (60 V, 70 °C) | <10 microamps per channel (60 V, 70 °C) |
| Maximum Load per Point | 0.25 A | 0.25 A |
| Voltage Drop | 0.15 VDC @ 0.25 A | 0.15 VDC @ 0.25 A |
| Surge (1 sec.) | 1 A | 1 A |
| Output Arrangement | 32 output channels; 4 groups of 8 outputs each. Points in each group share a common positive connection. | 32 output channels; 4 groups of 8 outputs each. Points in each group share a common negative connection. |
| Maximum Operating Common Mode Voltage | 250 V | 250 V |
| Isolation: Field to Logic | 1500 V | 1500 V |
| Output Turn-On/Off Time | 100 microseconds | 100 microseconds |
| Polling time from I/O processor to module[1] | 2–30 ms typical[2] | 2–30 ms typical[2] |
| Indicators | None; use optional OptoTerminal-G20 diagnostic display or breakout rack. | None; use optional OptoTerminal-G20 diagnostic display or breakout rack. |
| Maximum Number of HDD Modules on One Mounting Rack | 16 | 16 |
| Torque, hold-down screws | Not to exceed 1 in-lb (0.11 N-m) | Not to exceed 1 in-lb (0.11 N-m) |
| Torque, connector screws | 5.22 in-lb (0.59 N-m) | 5.22 in-lb (0.59 N-m) |
| Operating Temperature | -20 to 70 °C | -20 to 70 °C |
| Storage Temperature | -40 to 85 °C | -40 to 85 °C |
| Agency Approvals | SNAP-ODC-32-SRC: UL, CE, RoHS, DFARS, UKCA | SNAP-ODC-32-SNK: UL, CE, RoHS, DFARS; UKCA |
| Warranty | Lifetime | Lifetime |

1 Affects turn-on and turn-off determination
2 Time varies based on the SNAP PAC I/O processor (brain or on-the-rack controller), processor configuration, and Ethernet host communication activity.



© 2006–2026 Opto 22. All rights reserved. Dimensions and specifications are subject to change. Brand or product names used herein are trademarks or registered trademarks of their respective companies or organizations.

# PINOUTS AND WIRING

## Pinouts—SNAP-ODC-32-SRC and SNAP-ODC-32-SNK Digital Modules

### FUSING

For both sourcing and sinking modules, either fuse each point (as shown in the first and third groups, below) or fuse each group of points (as shown in the second and fourth groups).

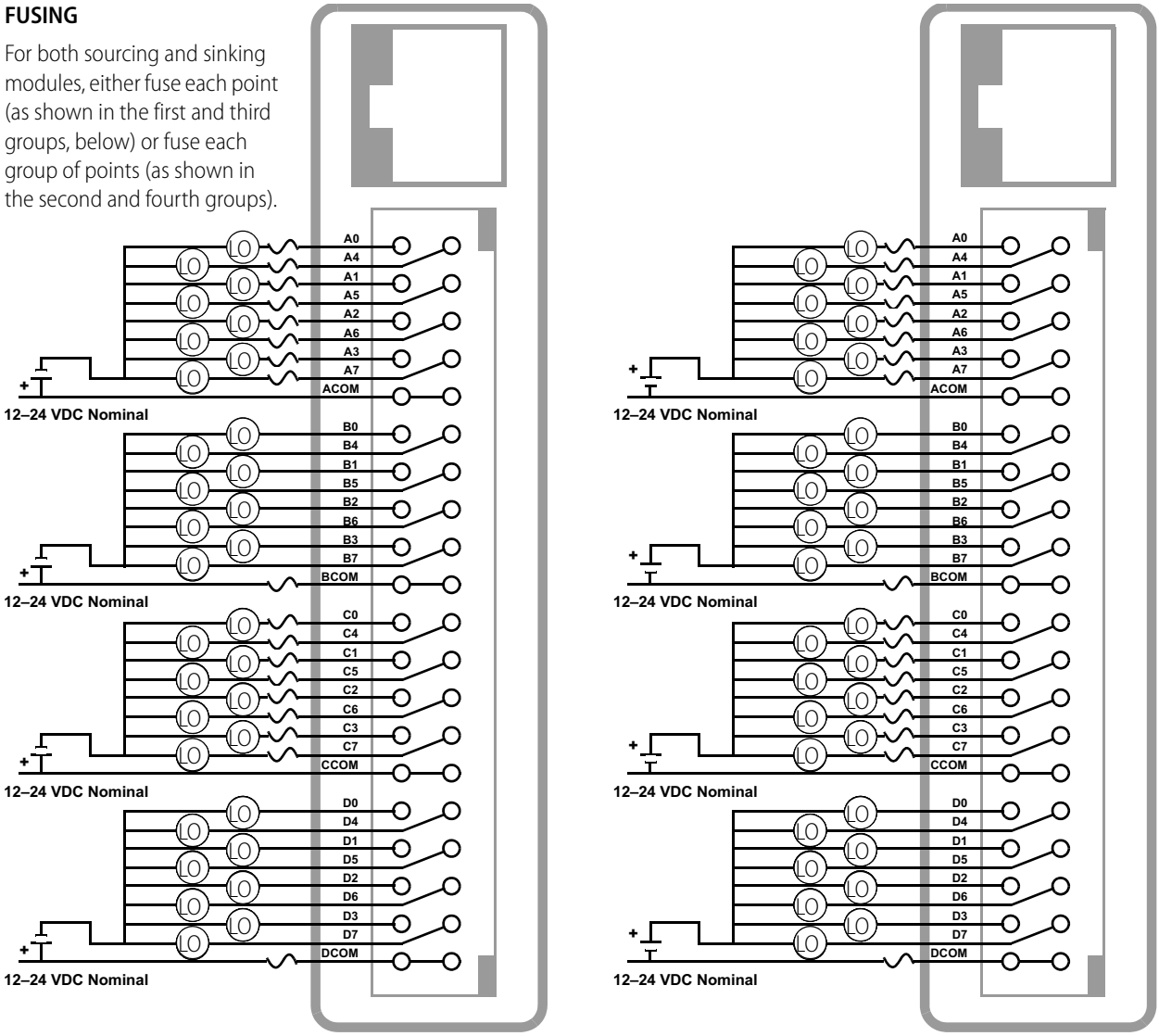


**SNAP-ODC-32-SRC**
Load Sourcing Module
(Top view of module)

**SNAP-ODC-32-SNK**
Load Sinking Module
(Top view of module)

*NOTE: The SNAP-ODC-32-SRC and SNAP-ODC-32-SNK modules have built-in transient suppression for each channel. Additional commutating diodes are not necessary.*



© 2006–2026 Opto 22. All rights reserved. Dimensions and specifications are subject to change. Brand or product names used herein are trademarks or registered trademarks of their respective companies or organizations.

# PINOUTS AND WIRING (CONTINUED)

## Pinouts for SNAP-IDC-32 and SNAP-IDC-32N Digital Modules

**IMPORTANT:** All SNAP-IDC-32 modules are polarity specific and must be wired as shown.

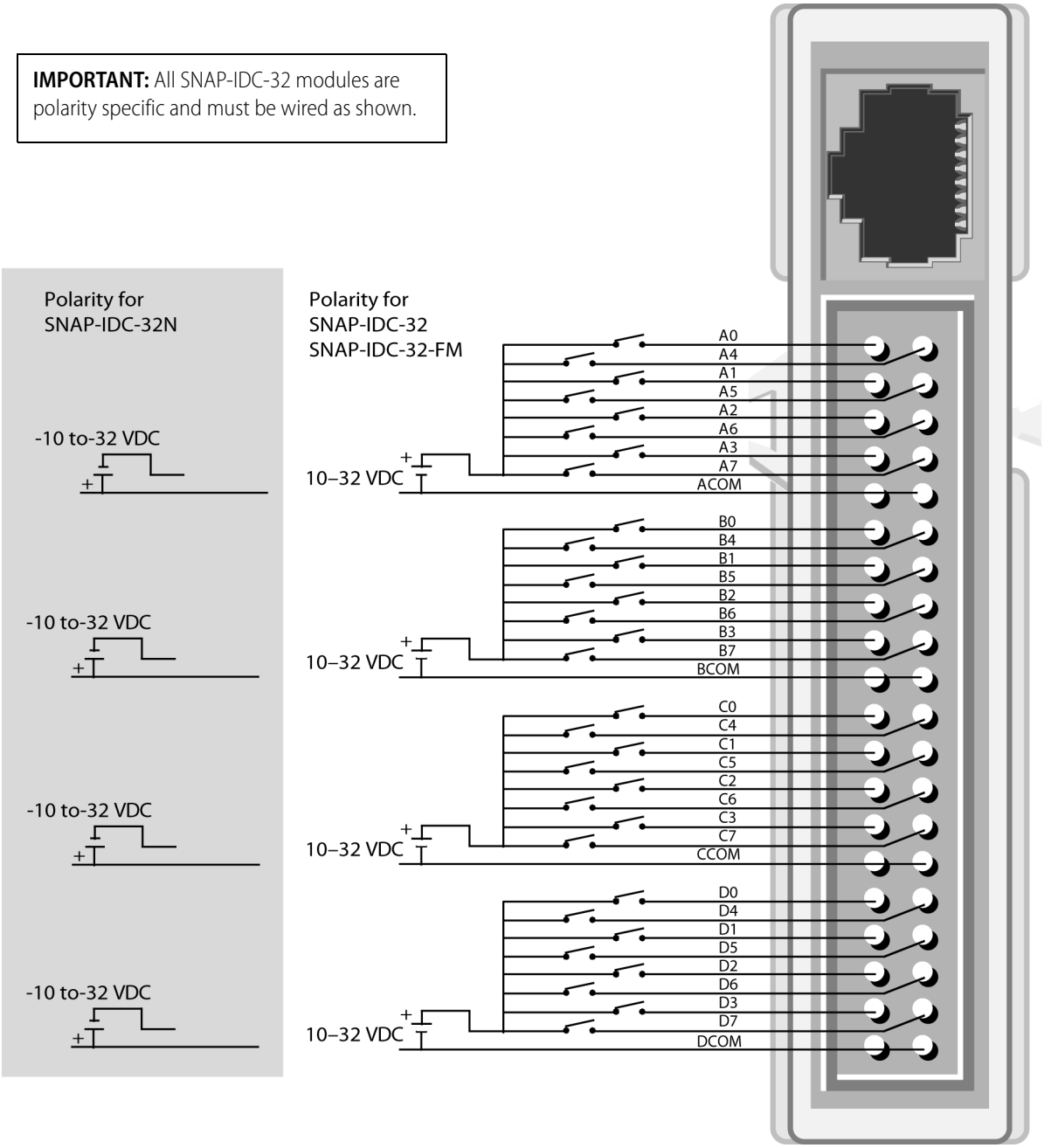




© 2006–2026 Opto 22. All rights reserved. Dimensions and specifications are subject to change. Brand or product names used herein are trademarks or registered trademarks of their respective companies or organizations.

# PINOUTS AND WIRING (CONTINUED)

## Pinouts for SNAP-IDC-32D and SNAP-IDC-32DN Digital Modules

**IMPORTANT:** All SNAP-IDC-32 modules are polarity specific and must be wired as shown.

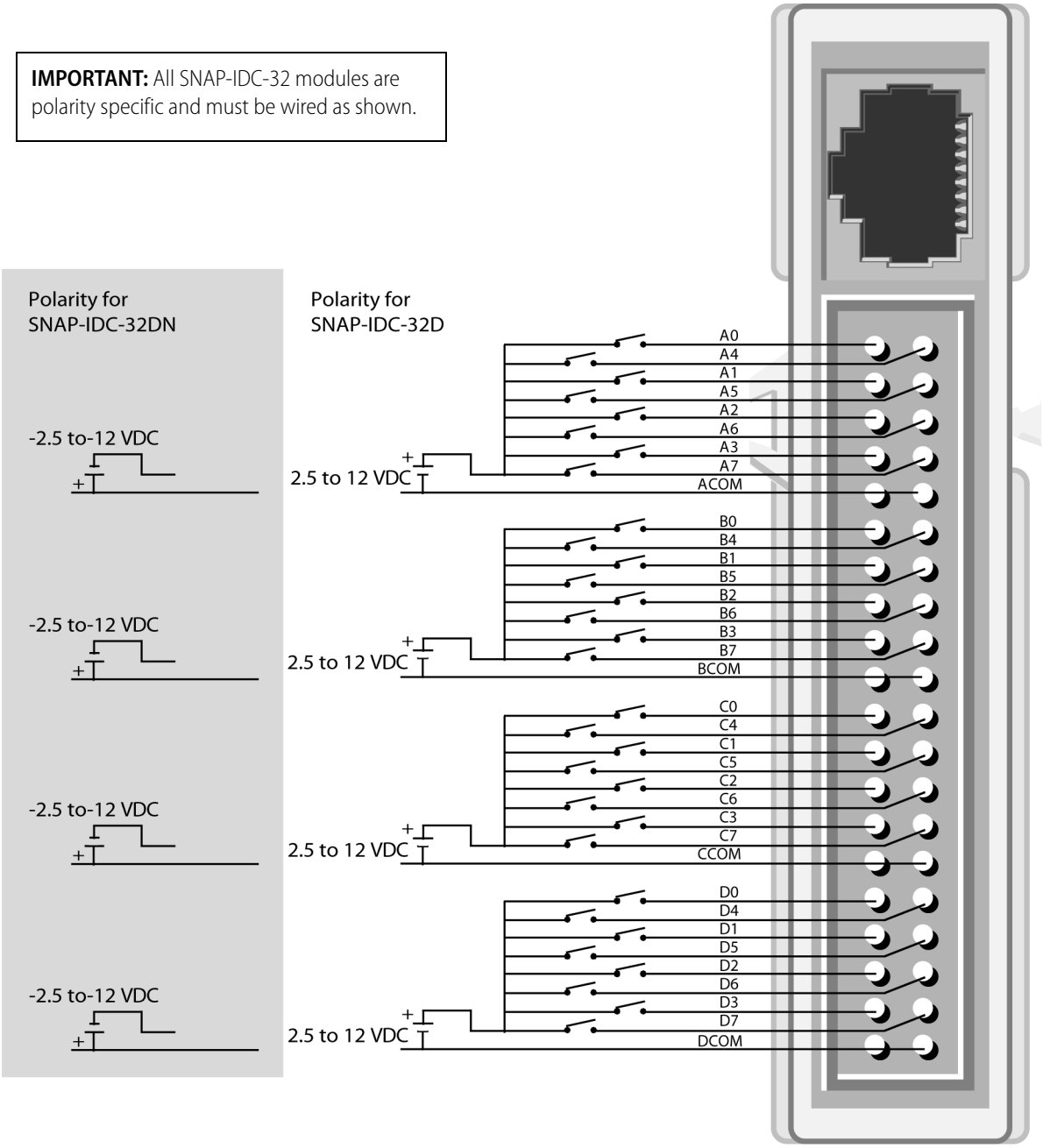




MADE IN THE USA

© 2006–2026 Opto 22. All rights reserved. Dimensions and specifications are subject to change. Brand or product names used herein are trademarks or registered trademarks of their respective companies or organizations.

# PINOUTS AND WIRING (CONTINUED)

## Connector Wiring—SNAP 32-Point Digital Modules

The following diagram shows 32-channel module connector wiring for the SNAP-HD-CBF6 wiring harness.

Wires from the wiring harness are grouped into four sets. Each set contains color-coded wires.

| Harness Wire Color | Pin Number | Signal | Signal | Pin Number | Harness Wire Color |
|---|---|---|---|---|---|
| Gray | 40 | A0 | A4 | 39 | White |
| Blue | 38 | A1 | A5 | 37 | Violet |
| Yellow | 36 | A2 | A6 | 35 | Green |
| Red | 34 | A3 | A7 | 33 | Orange |
| Black | 32 | ACOM | ACOM | 31 | Brown |
| Gray | 30 | B0 | B4 | 29 | White |
| Blue | 28 | B1 | B5 | 27 | Violet |
| Yellow | 26 | B2 | B6 | 25 | Green |
| Red | 24 | B3 | B7 | 23 | Orange |
| Black | 22 | BCOM | BCOM | 21 | Brown |
| Gray | 20 | C0 | C4 | 19 | White |
| Blue | 18 | C1 | C5 | 17 | Violet |
| Yellow | 16 | C2 | C6 | 15 | Green |
| Red | 14 | C3 | C7 | 13 | Orange |
| Black | 12 | CCOM | CCOM | 11 | Brown |
| Gray | 10 | D0 | D4 | 9 | White |
| Blue | 8 | D1 | D5 | 7 | Violet |
| Yellow | 6 | D2 | D6 | 5 | Green |
| Red | 4 | D3 | D7 | 3 | Orange |
| Black | 2 | DCOM | DCOM | 1 | Brown |

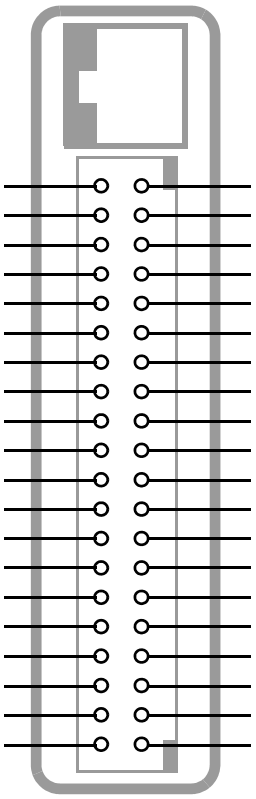

**Connector wiring for SNAP-ODC-32-SNK, SNAP-ODC-32-SRC, SNAP-IDC-32, SNAP-IDC-32N, and SNAP-IDC-32DN (top view of module)**

## Building Your Own Wiring Harness or Header Cable for a 32-channel module

To build your own wiring harness similar to the SNAP-HD-CBF6, you will need the following parts:

**Connector:** Molex 15-04-5401
**Pin housing:** Molex 50-57-9320
**Pins:** Molex p/n 16-02-0103
**Cable:** Alpha 5020/40c (24 AWG, 40 conductor) or equivalent (UL type CM)

To build your own SNAP-HD-BF6 header cable for use with either breakout rack, you will need the parts listed below. Both ends of the cable use the same connectors.

**Connector:** Molex 15-04-5401
**Pin housing:** Molex 50-57-9320
**Pins:** Molex p/n 16-02-0103
**Cable:** Alpha 5020C or Manhattan M38910 (24 AWG, 10 conductor, 4x length needed) or equivalent (UL type CM)



© 2006–2026 Opto 22. All rights reserved. Dimensions and specifications are subject to change. Brand or product names used herein are trademarks or registered trademarks of their respective companies or organizations.

# PINOUTS AND WIRING (CONTINUED)

## Pinouts—16-Channel Digital Input Modules

Applies to the SNAP-IDC-16, SNAP-IDC-HT-16, SNAP-IAC-16, SNAP-IAC-A-16 (Obsolete) and SNAP-IAC-K-16 (Obsolete).

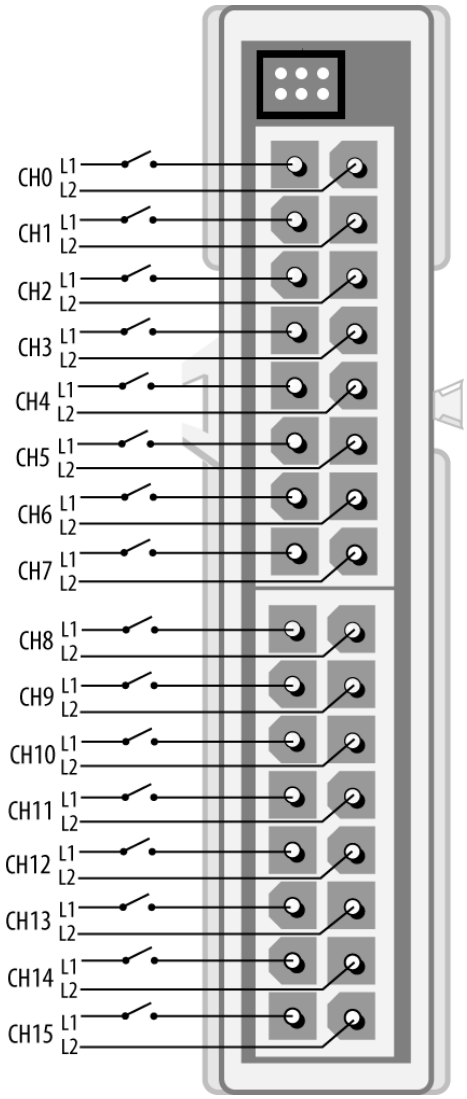


*NOTE: The connectors on these modules are not polarity-sensitive. You can connect the positive lead (+) for each channel (or point) to either L1 or L2, and this can vary from point to point on the module.*



© 2006–2026 Opto 22. All rights reserved. Dimensions and specifications are subject to change. Brand or product names used herein are trademarks or registered trademarks of their respective companies or organizations.

# PINOUTS AND WIRING (CONTINUED)

## Connector Wiring—SNAP 16-Point Digital Modules

The following diagram shows16-channel module connector wiring for the SNAP-HD-ACF6 wiring harness. Applies to SNAP-IDC-16, SNAP-IDC-HT-16, SNAP-IAC-16, SNAP-IAC-A-16 (Obsolete) ,and SNAP-IAC-K-16 (Obsolete) high-density digital modules.

*NOTE: The small four-pin connector on the top of a 16-point module connects to the optional OptoTerminal-G20 using a special adapter cable, included with the OptoTerminal.*

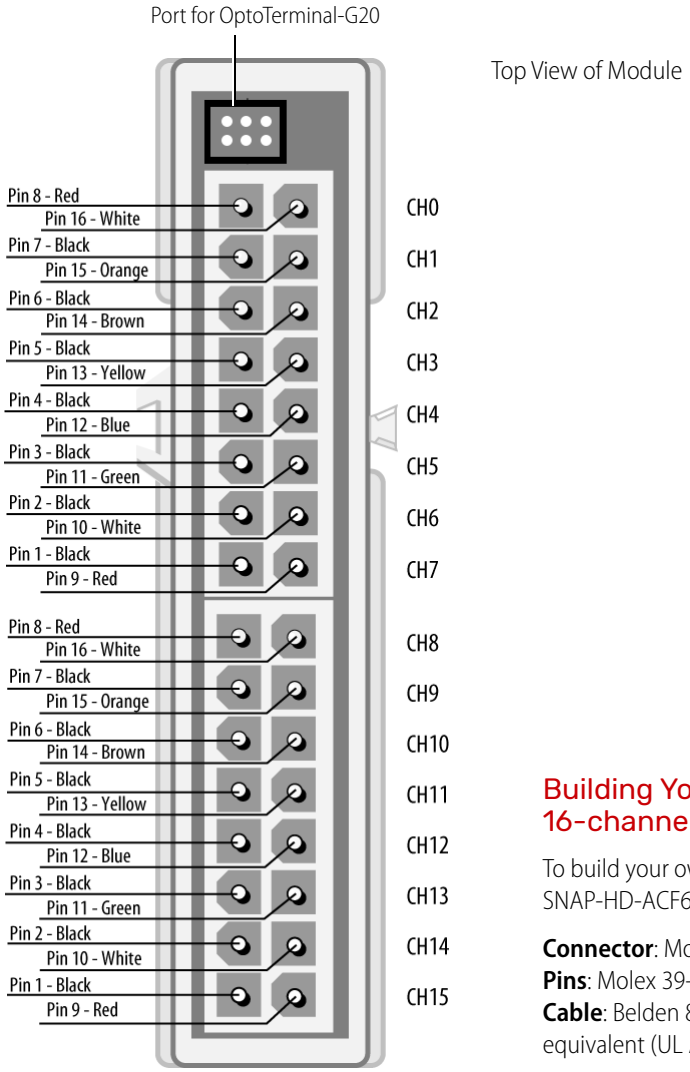


## Building Your Own Wiring Harness for a 16-channel Module

To build your own wiring harness similar to the SNAP-HD-ACF6, you will need the following parts:

**Connector**: Molex 39-01-2165
**Pins**: Molex 39-00-0214
**Cable**: Belden 8308 (22 AWG, 16 conductor, shielded) or equivalent (UL AWM style 2464)



© 2006–2026 Opto 22. All rights reserved. Dimensions and specifications are subject to change. Brand or product names used herein are trademarks or registered trademarks of their respective companies or organizations.

# DIMENSIONAL DRAWINGS

## SNAP 32-Point Digital Modules

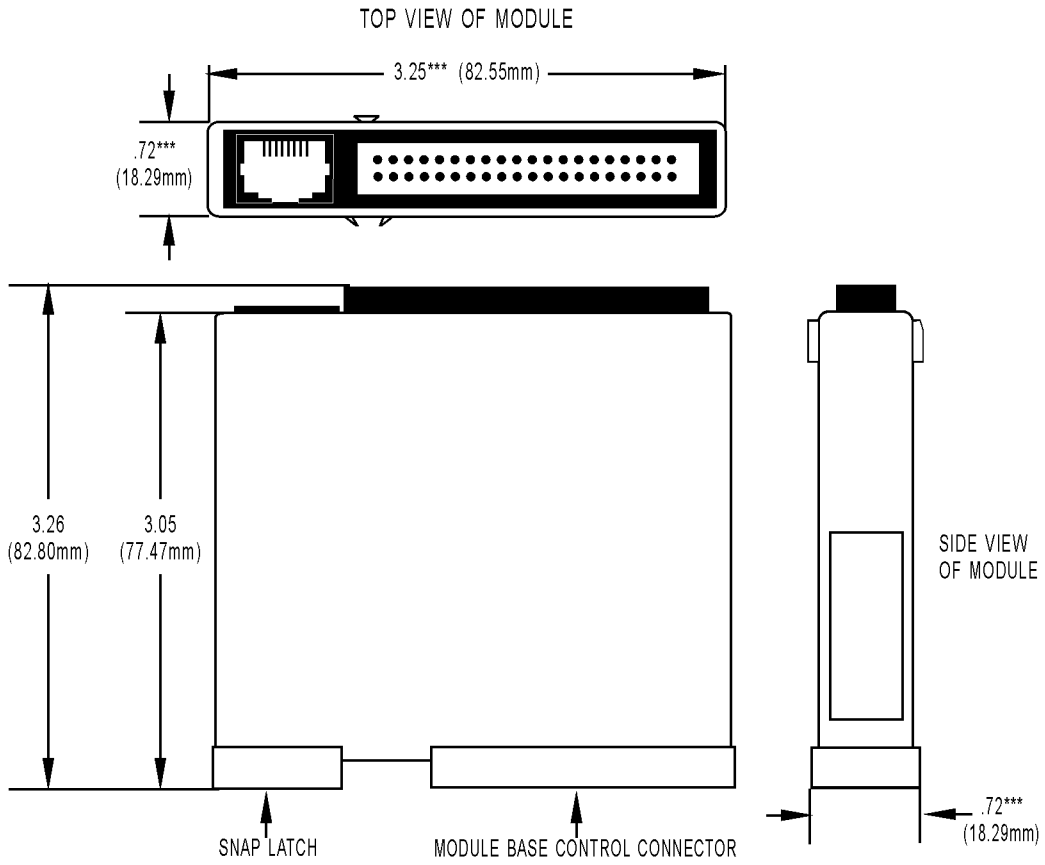


TOLERANCES LEGEND
* +/– .010" ** +/– .020"
*** +/– .030" **** +/– .060"
NO * REFERENCE ONLY



MADE IN THE USA

© 2006–2026 Opto 22. All rights reserved. Dimensions and specifications are subject to change. Brand or product names used herein are trademarks or registered trademarks of their respective companies or organizations.

# DIMENSIONAL DRAWINGS (CONTINUED)

## SNAP 16-Point Digital Modules

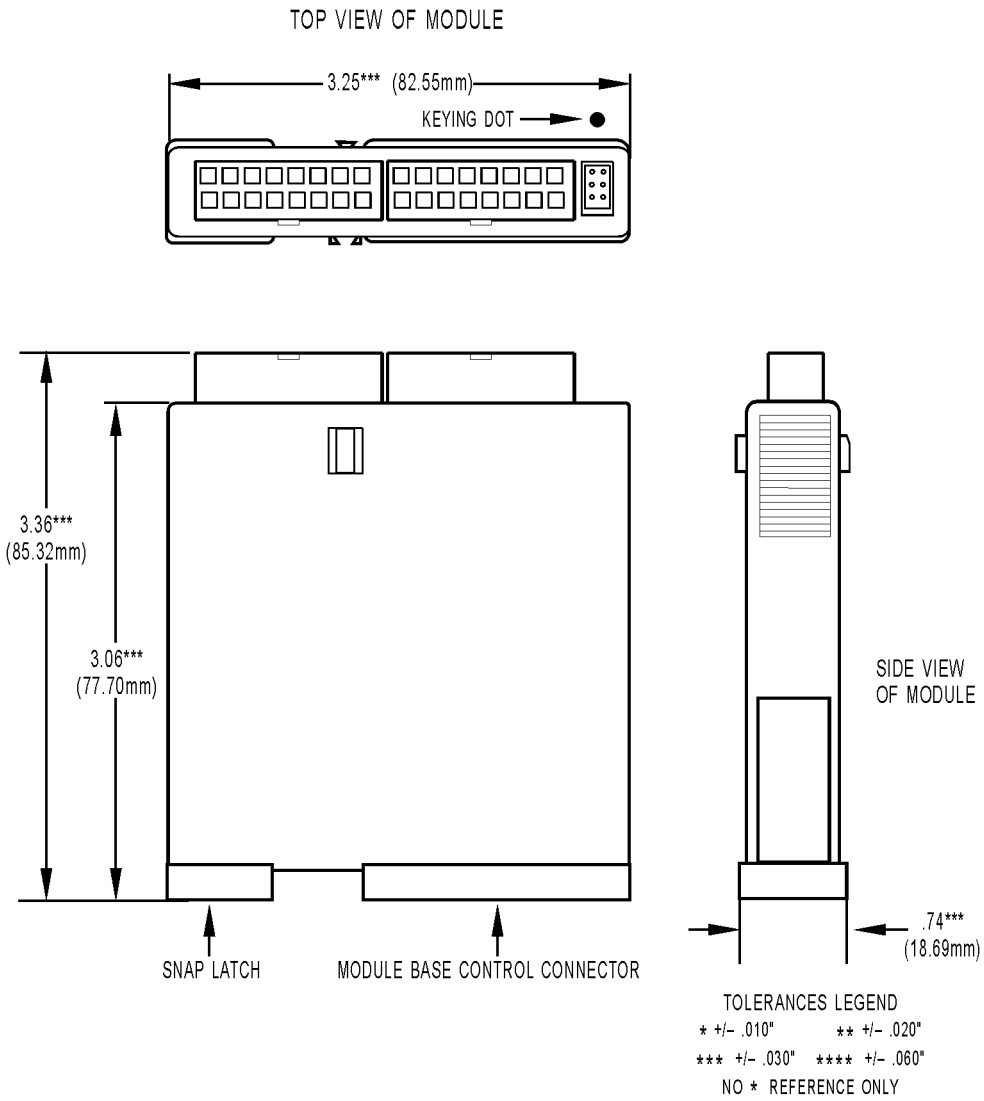




© 2006–2026 Opto 22. All rights reserved. Dimensions and specifications are subject to change. Brand or product names used herein are trademarks or registered trademarks of their respective companies or organizations.

# DIMENSIONAL DRAWINGS (CONTINUED)

## SNAP High-Density Digital Modules (All)

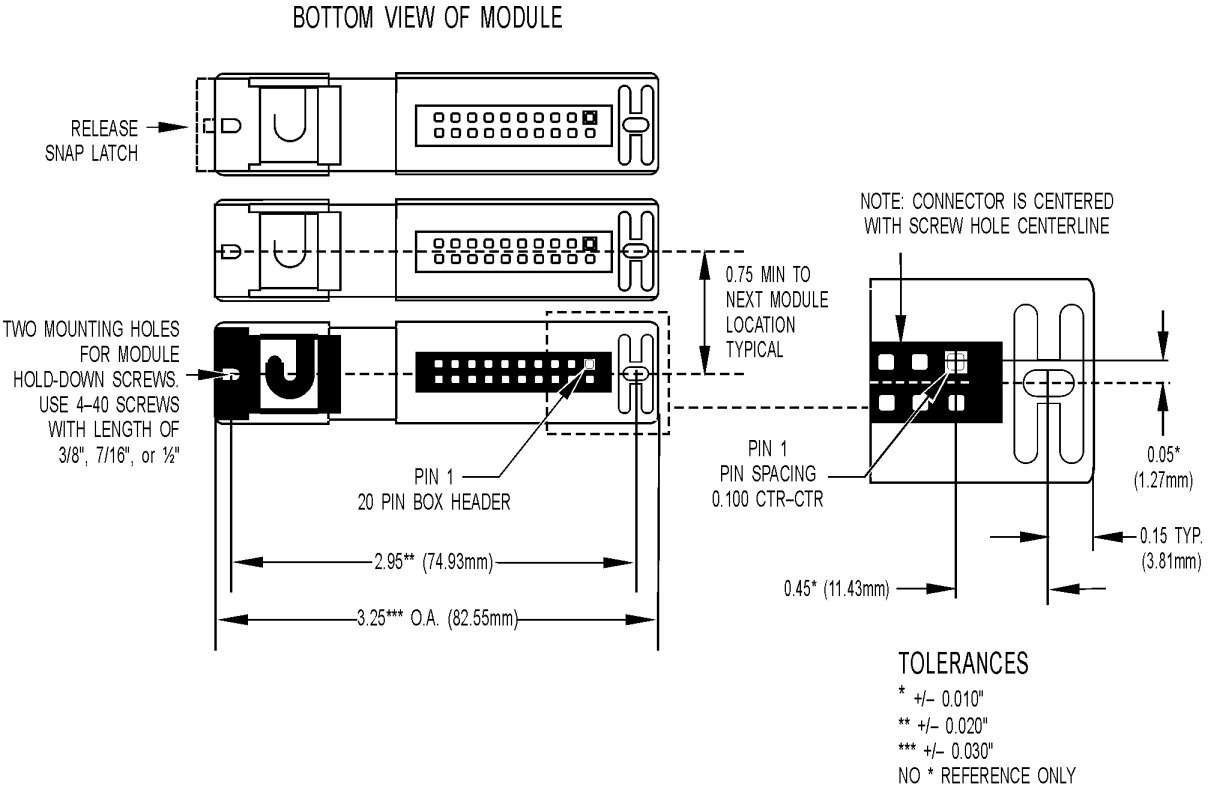


**IMPORTANT:** The mounting rack connector has 24 pins; the module connector has 20 pins. The extra pins on the mounting rack connector prevent misalignment of the module during installation.



© 2006–2026 Opto 22. All rights reserved. Dimensions and specifications are subject to change. Brand or product names used herein are trademarks or registered trademarks of their respective companies or organizations.

# DIMENSIONAL DRAWINGS (CONTINUED)

## SNAP High-Density Digital Modules (All)

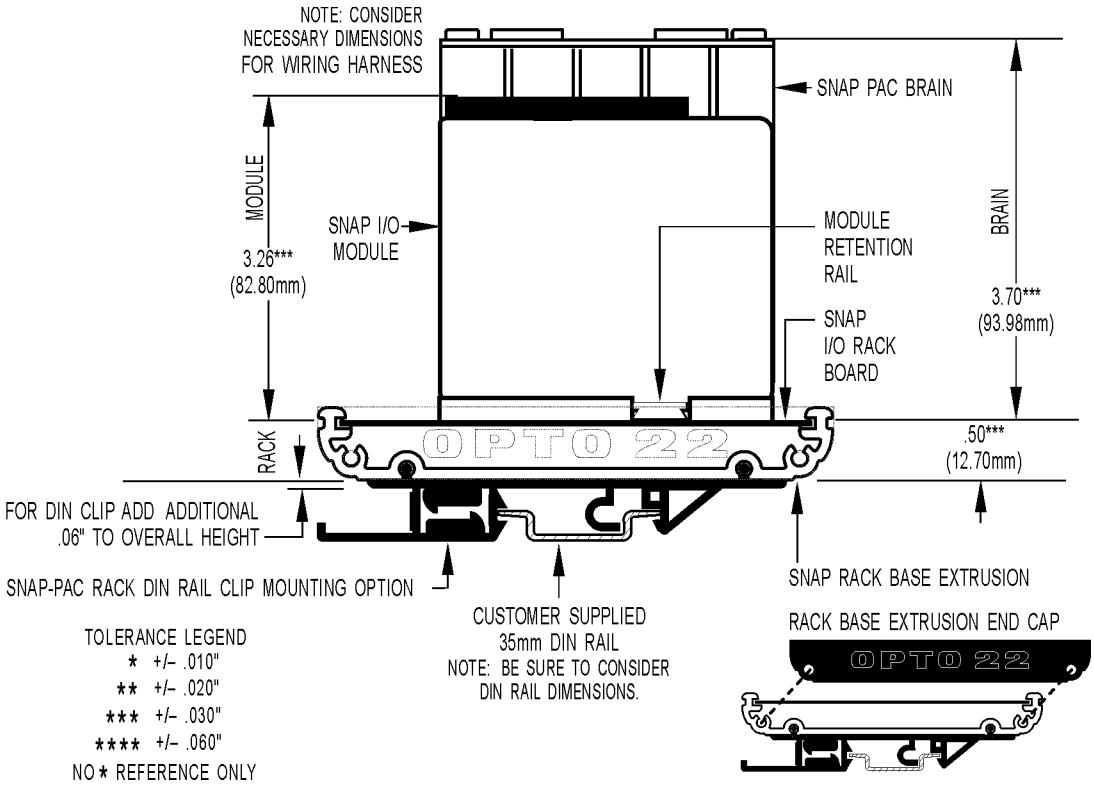




© 2006–2026 Opto 22. All rights reserved. Dimensions and specifications are subject to change. Brand or product names used herein are trademarks or registered trademarks of their respective companies or organizations.

# More about Opto 22

OPTO 22

## PRODUCTS

Opto 22 develops and manufactures reliable, easy-to-use, open standards-based hardware and software products. Industrial automation, process control, remote monitoring, data acquisition, and industrial internet of things (IIoT) applications worldwide all rely on Opto 22.

### *groov* RIO®

*groov* RIO edge I/O offers a single, compact, PoE-powered industrial package with web-based configuration and IIoT software built in, support for multiple OT and IT protocols, and security features like a device firewall, data encryption, and user account control.

Standing alone, *groov* RIO connects to sensors, equipment, and legacy systems, collecting and securely publishing data from field to cloud. Choose a universal I/O model with thousands of possible field I/O configurations, with or without Ignition from Inductive Automation®, or a RIO EMU energy monitoring unit that reports 64 energy data values from 3-phase loads up to 600 VAC, Delta or Wye.

You can even write an IEC 61131-3 compliant control program to run on *groov* RIO, using CODESYS. You can also use *groov* RIO with a Modbus/TCP master or as remote I/O for a *groov* EPIC system.

### *groov* EPIC® System

Opto 22's *groov* Edge Programmable Industrial Controller (EPIC) system gives you industrially hardened control with a flexible Linux®-based processor with gateway functions, guaranteed-for-life I/O, and software for your automation and IIoT applications.

#### *groov* EPIC Processor

The heart of the system is the *groov* EPIC processor. It handles a wide range of digital, analog, and serial functions for data collection, remote monitoring, process control, and discrete and hybrid manufacturing.

In addition, the EPIC provides secure data communications among physical assets, control systems, software applications, and online services, both on premises and in the cloud. No industrial PC needed.

Configuring and troubleshooting I/O and networking is easier with the EPIC's integrated high-resolution color touchscreen. Authorized users can manage the system locally on the touchscreen, on a monitor connected via the HDMI or USB ports, or on a PC or mobile device with a web browser.

#### *groov* EPIC I/O

*groov* I/O connects locally to sensors and equipment. Modules have a spring-clamp terminal strip, integrated wireway, swing-away cover, and LEDs indicating module health and discrete channel status. *groov* I/O is hot swappable, UL Hazardous Locations approved, and ATEX compliant.

#### *groov* EPIC Software

The *groov* EPIC processor comes ready to run the software you need:

- Programming: Choose flowchart-based PAC Control, CODESYS Development System for IEC61131-3 compliant programs, or secure shell access (SSH) to the Linux OS for custom applications
- Node-RED for creating simple IIoT logic flows from pre-built nodes
- Efficient MQTT data communications with string or Sparkplug data formats
- Multiple OPC UA server options
- HMI: *groov* View to build your own HMI viewable on touchscreen, PCs, and mobile devices; PAC Display for a Windows HMI; Node-RED dashboard UI
- Ignition or Ignition Edge® from Inductive Automation (requires license purchase) with OPC-UA drivers to Allen-Bradley®, Siemens®, and other control systems, and MQTT communications

### Older products

From solid state relays, to world-famous G4 and SNAP I/O, to SNAP PAC controllers, older Opto 22 products are still supported and working hard at thousands of installations worldwide. You can count on us for the reliability and service you expect, now and in the future.

## QUALITY

Founded in 1974, Opto 22 has established a worldwide reputation for high-quality products. All are made in the U.S.A. at our manufacturing facility in Temecula, California.

Because we test each product twice before it leaves our factory rather than testing a sample of each batch, we can afford to guarantee most solid-state relays and optically isolated I/O modules for life.

## FREE PRODUCT SUPPORT

Opto 22's California-based Product Support Group offers free technical support for Opto 22 products from engineers with decades of training and experience. Support is available in English and Spanish by phone or email, Monday–Friday, 7 a.m. to 5 p.m. PST.

Support is always available on our website, including free online training at OptoU, how-to videos, user's guides, the Opto 22 KnowledgeBase, and OptoForums.

## PURCHASING OPTO 22 PRODUCTS

Opto 22 products are sold directly and through a worldwide network of distributors, partners, and system integrators. For more information, contact Opto 22 headquarters at **800-321-6786** (toll-free in the U.S. and Canada) or **+1-951-695-3000**, or visit our website at www.opto22.com.

**OPTO 22** • www.opto22.com
43044 Business Park Dr. Temecula, CA 92590-3614

**SALES** • sales@opto22.com
800-321-6786 • 1-951-695-3000

**SUPPORT** • support@opto22.com
800-835-6786 • 1-951-695-3080

MADE IN THE USA

© 2001–2023 Opto 22. All rights reserved. Dimensions and specifications are subject to change. Brand or product names used herein are trademarks or registered trademarks of their respective companies or organizations.
Form 1335-230802