Rev	AWO #	Description	Date	Appr
-		RELEASED	5/28/21	

APPROVED: _____

DATE: _____ TITLE: _____

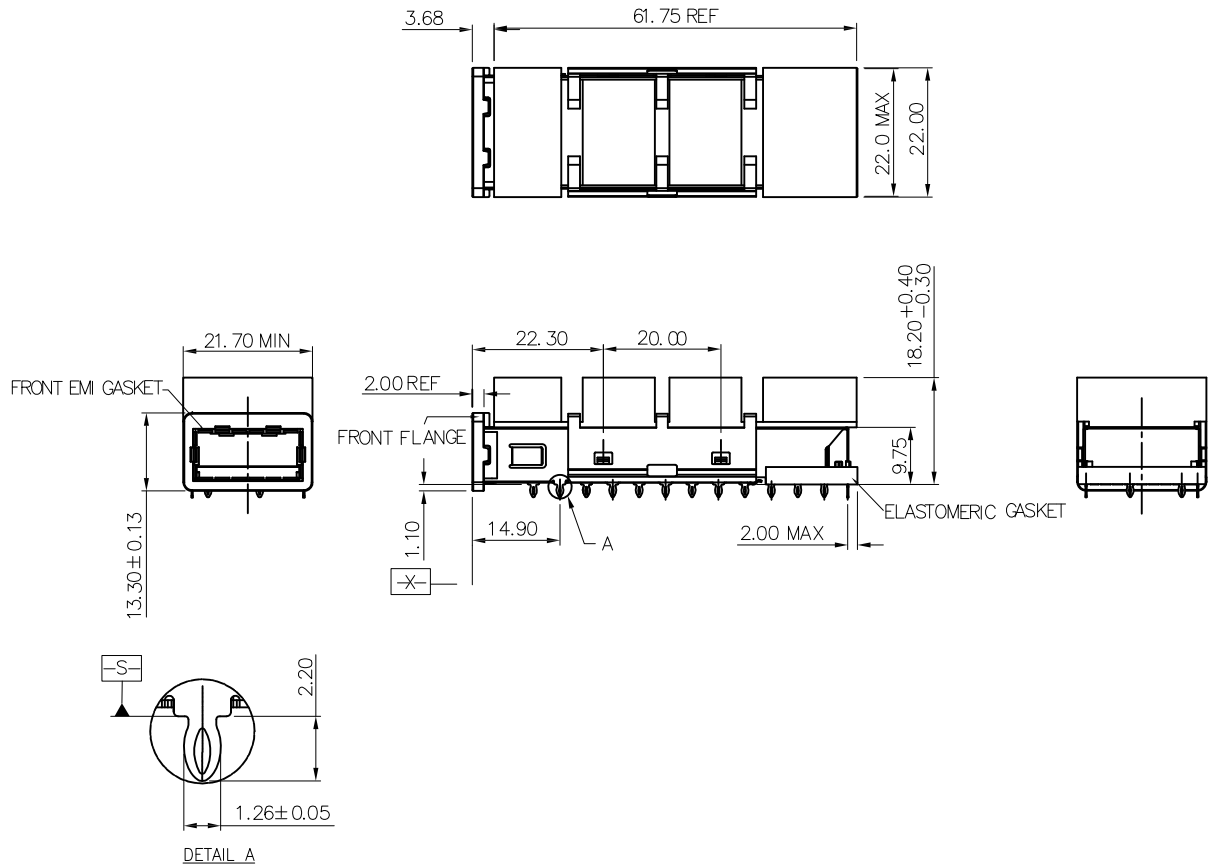

SPECIFICATIONS:
Material:
Cage: Copper Alloy
Electrometric Gasket: Conductive Rubber
Cage Rear EMI Gasket: Conductive Foam
Front Flange: Zinc Alloy, Tin over Nickel and Copper flash
Front EMI Gasket: Copper Alloy, Matte Tin over Nickel underplate overall
Heat Sink Clip: Copper Alloy
Heat Sink: Nickel plated
Temperature Rating:
Operating temperature: −40°C to +85°C
Environmental:
Lead free, RoHS compliant

RoHS COMPLIANT

UNLESS OTHERWISE SPECIFIED ALL DIMENSIONS ARE MILLIMETERS. TOLERANCES: EXCEPT AS NOTED

mm		Angles
.X	± .25	±2°
.XX	± .13	
.XXX	± .10	

DRAWN	WX	5/28/21
CHECKED	RC	5/28/21
APPROVED		

THIS DRAWING CONTAINS INFORMATION THAT IS PROPRIETARY AND SHOULD NOT BE USED WITHOUT PRIOR WRITTEN PERMISSION FROM ADAM TECH

ADAM TECH
909 Rahway Avenue,
Union, NJ 07083
Phone: 908-687-5000
Fax: 908-687-5710

TITLE
10 GIGABIT SMALL FORM FACTOR CAGE, 1PORT
DIP TYPE, EMI CLIP W/ GASKET, W/ HEAT SINK

SIZE	PART NO.	REV.
X	XFC-1-CS5-EMI-HSK	-

REF: S00005C | SCALE: NTS | SHEET 1 OF 2

Rev	AWO #	Description	Date	Appr
		SEE SHT 1 OF 2 FOR REVISION		

APPROVED: _____

DATE: _____ TITLE: _____

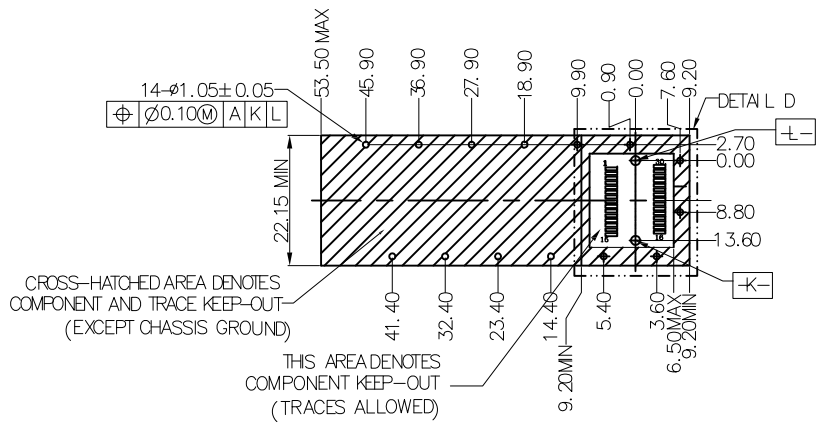

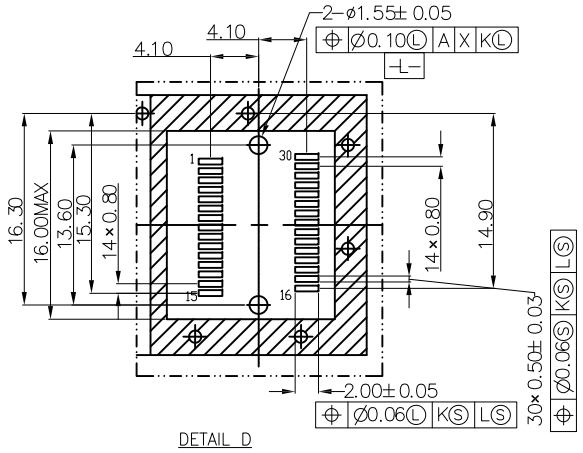

DETAIL D

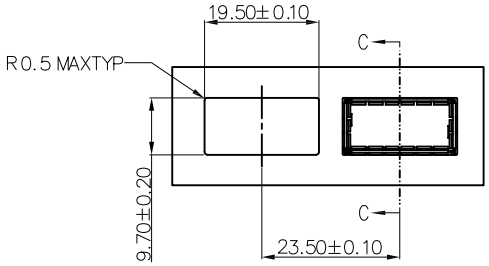

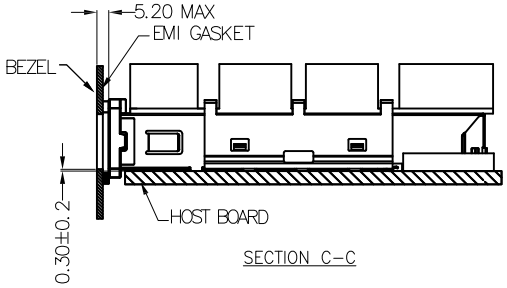

SECTION C-C

UNLESS OTHERWISE SPECIFIED ALL DIMENSIONS ARE MILLIMETERS. TOLERANCES: EXCEPT AS NOTED

mm		Angles
.X	± .25	±2°
.XX	± .13	
.XXX	± .10	

ADAM TECH
909 Rahway Avenue,
Union, NJ 07083
Phone: 908-687-5000
Fax: 908-687-5710

DRAWN	WX	5/28/21
CHECKED	RC	5/28/21
APPROVED		

TITLE
10 GIGABIT SMALL FORM FACTOR CAGE, 1PORT
DIP TYPE, EMI CLIP W/ GASKET, W/ HEAT SINK

SIZE	PART NO.	REV.
X	XFC-1-CS5-EMI-HSK	-

REF: S00005C | SCALE: NTS | SHEET 2 OF 2

THIS DRAWING CONTAINS INFORMATION THAT IS PROPRIETARY AND SHOULD NOT BE USED WITHOUT PRIOR WRITTEN PERMISSION FROM ADAM TECH