Rev	AWO #	Description	Date	Appr
-		RELEASED	5/8/15	

APPROVED: _____

DATE: _____ TITLE: _____

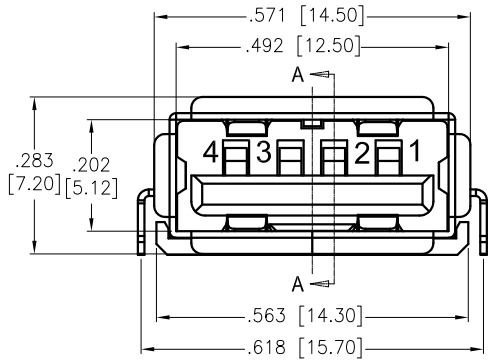

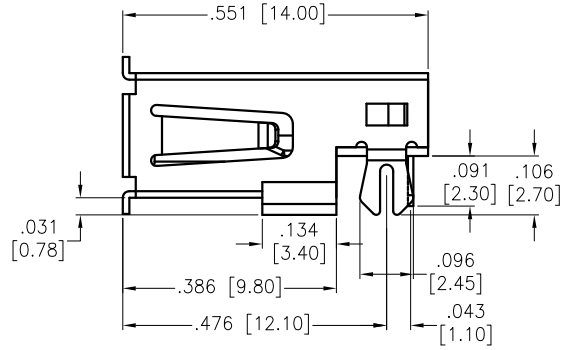

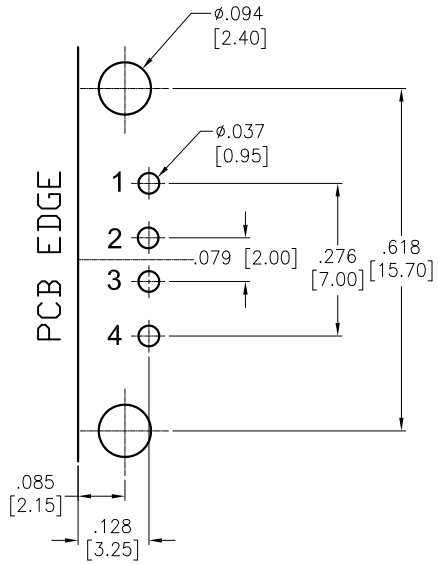

RECOMMENDED PCB LAYOUT
(BOTTOM VIEW)

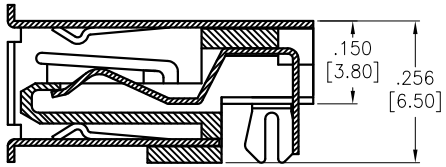

SECTION A–A

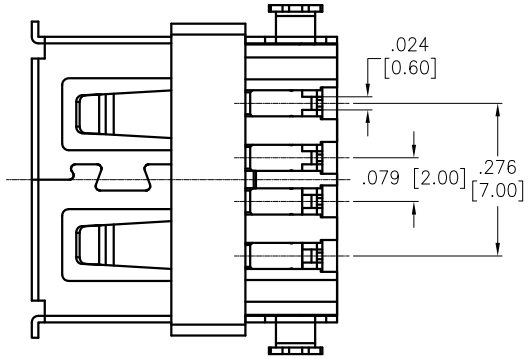

SPECIFICATIONS:
Material:
Insulator: Hi–Temp Thermoplastic, rated UL 94V–0
Insulator color: Black
Contacts: Phosphor Bronze
Shell: Brass, nickel plated
Plating:
Gold over Nickel underplate on contact area,
Tin over Copper underplate on PCB tails
Electrical:
Rated Voltage & Current: 1.5A @250VAC Min.
Contact resistance: 30 mohms max
Insulation resistance: 1,000 Mohms min @ 500 VDC.
Dielectric withstanding voltage: 750 VAC for 1 minute
Environmental:
Lead free, RoHS compliant.

RoHS COMPLIANT

UNLESS OTHERWISE SPECIFIED
ALL DIMENSIONS ARE INCHES [MM]
TOLERANCES: EXCEPT AS NOTED

INCHES		HOLES	
.X	± .10	Ø.X	±.10
.XX	± .020	Ø.XX	±.015
.XXX	± .015	Ø.XXX	±.010

APPROVALS		DATE
DRAWN	AY	5/8/15
CHECKED	NP	5/8/15
APPROVED		

ADAM TECH
909 Rahway Avenue, Union, NJ 07083
Phone: 908-687-5000 Fax: 908-687-5710

TITLE: UNIVERSAL SERIAL BUS, TYPE A, FEMALE RIGHT ANGLE , DIP TYPE, REVERSE TYPE

SIZE	PART NO.	REV.
X	USB-A-S-RA-EH9-R-HT	-

REF: S00095T | SCALE: NTS | SHEET 1 OF 1