Rev	AWO #	Description	Date	Appr
-		RELEASED	3/30/15	

APPROVED: _____

DATE: _____ TITLE: _____

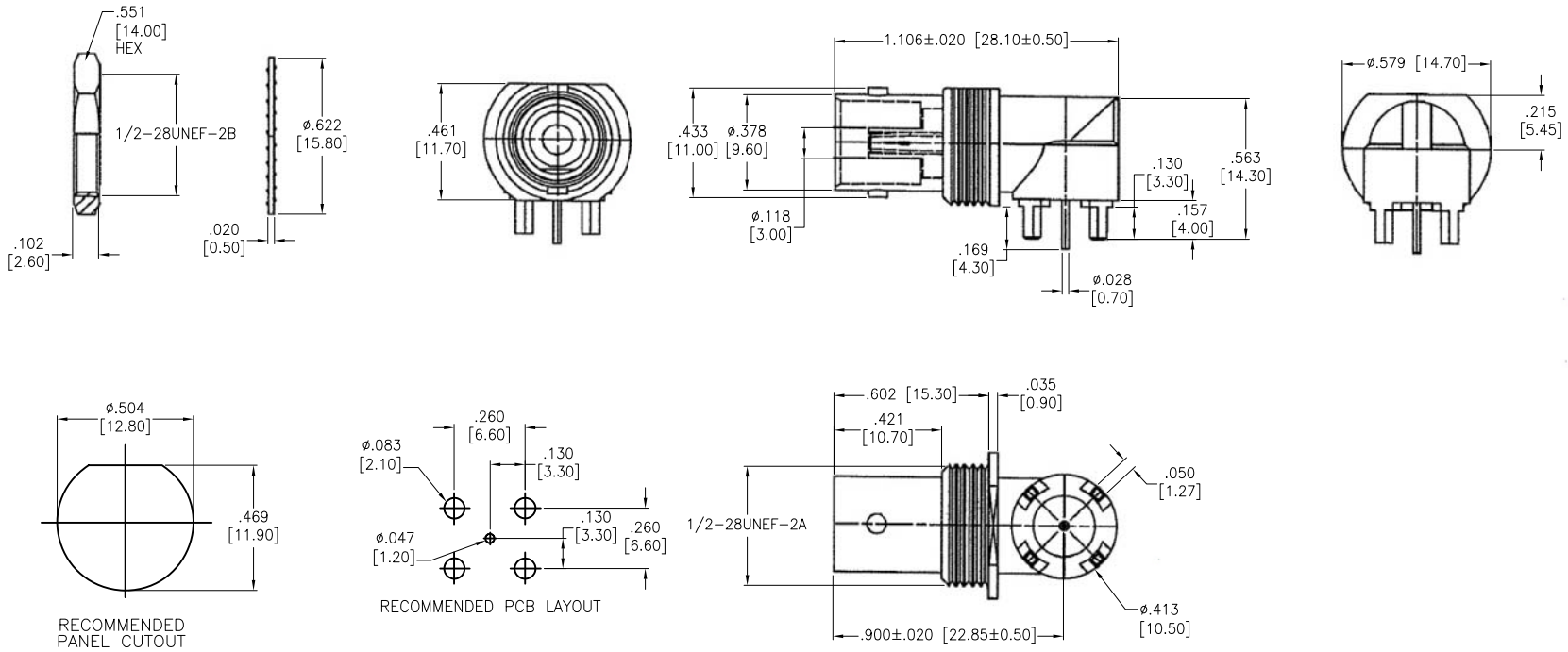

DESCRIPTION	MATERIAL	FINISH
CENTER PIN	BRASS	TIN
NUT	ZINC	NICKEL
WASHER	IRON	NICKEL
INSULATOR	TEFLON	WHITE
BODY	ZINC ALLOY	TIN
CENTER CONTACT	PHOSPHOR BRONZE	GOLD

SPECIFICATIONS:

Electrical:

Nominal Impedance: 75 ohms

Frequency range: 0–1 GHz

Contact Resistance: 3 Milliohms max. (Center Contact)
2 Milliohms max. (Outer Contact)

Insulator Resistance: 5000 Megohms min.

Environmental:

Lead free, RoHS compliant.

RoHS COMPLIANT

UNLESS OTHERWISE SPECIFIED
ALL DIMENSIONS ARE INCHES [MM]
TOLERANCES: EXCEPT AS NOTED

INCHES		HOLES	
.X	± .10	Ø.X	±.10
.XX	± .020	Ø.XX	±.015
.XXX	± .015	Ø.XXX	±.010

APPROVALS		DATE
DRAWN	AY	3/30/15
CHECKED	LW	3/30/15
APPROVED		

ADAM TECH
909 Rahway Avenue, Union, NJ 07083
Phone: 908-687-5000 Fax: 908-687-5710

TITLE: BNC CONNECTOR, VERTICAL, PCB, MOUNT JACK, 75 OHM, TEFLON, W / NUT, WASHER

SIZE	PART NO.	REV.
X	RF1-108A-T-00-75-HDW	-

REF: S00049T | SCALE: NTS | SHEET 1 OF 1