Rev	AWO #	Description	Date	Appr
-		RELEASED	4/29/08	

APPROVED: _____

DATE: _____ TITLE: _____

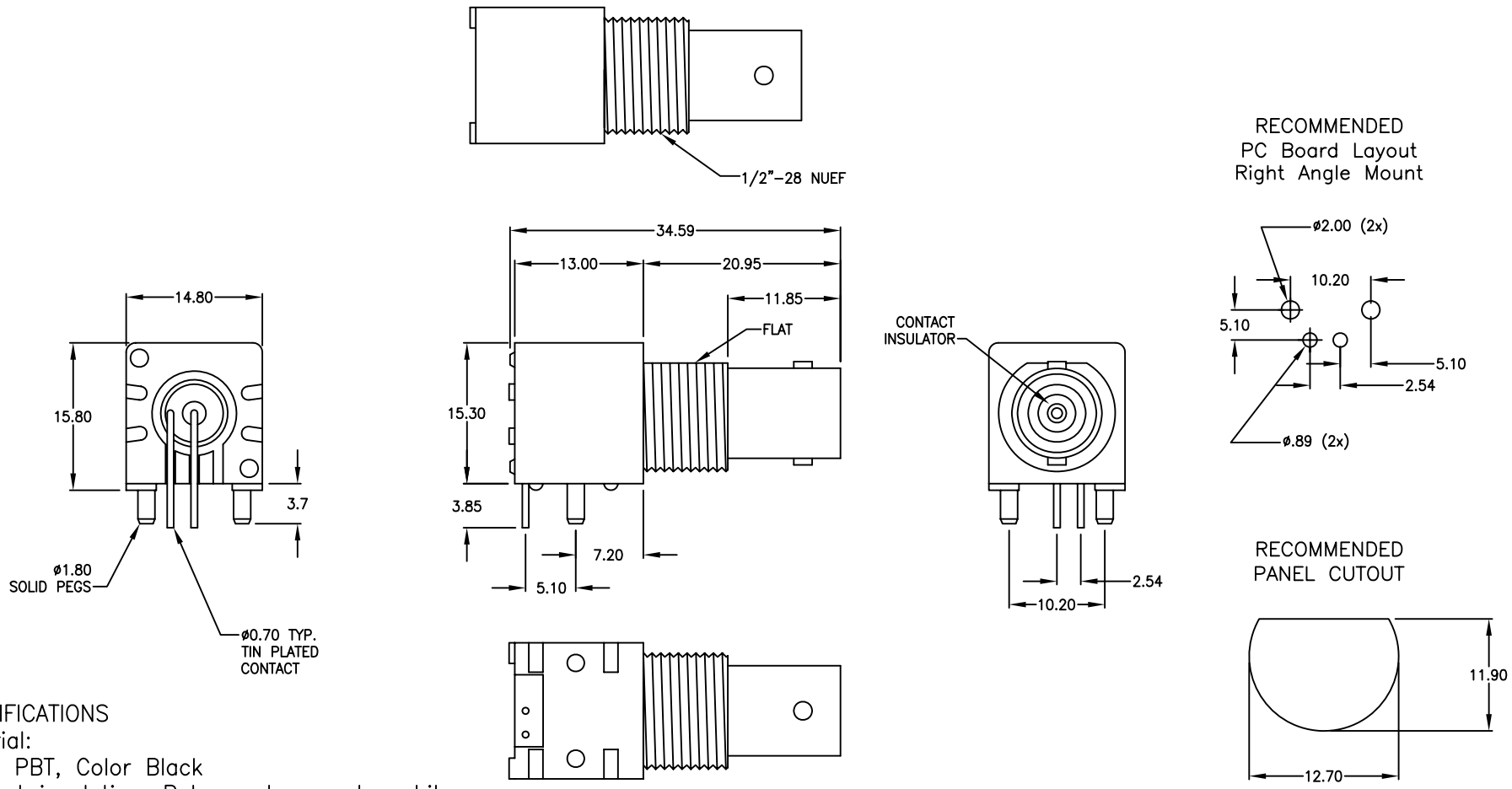

SPECIFICATIONS
Material:
Body: PBT, Color Black
Contact insulation: Polypropylene, color white.
Contacts: Phosphor Bronze, Gold and Tin plated.
Dielectric: Delrin
Electrical
Nominal Impedance: 75 Ohms
Frequency Range: 0 – 4 GHz
Maximum Peak Voltage: 500V
Insulation Resistance: 5000 Mohms min @ 500 VDC
Dielectric Withstanding Voltage: 1500 VAC rms.
Environmental:
Lead free, RoHS compliant.
Recommended soldering temp: 235 for 5 sec.

RoHS COMPLIANT

UNLESS OTHERWISE SPECIFIED
ALL DIMENSIONS ARE MM [INCHES]
TOLERANCES: EXCEPT AS NOTED

INCHES		HOLES	
.X	± .10	Ø.X	±.10
.XX	± .020	Ø.XX	±.015
.XXX	± .015	Ø.XXX	±.010

APPROVALS		DATE
DRAWN	SS	4/29/08
CHECKED		
APPROVED		

ADAM TECH
909 Rahway Avenue, Union, NJ 07083
Phone: 908-687-5000 Fax: 908-687-5710

TITLE: BNC, RIGHT ANGLE, 75 ohm

SIZE	PART NO.	REV.
X	RF1-01A-D-00-75	-

REF: | SCALE: NTS | SHEET 1 OF 1