Rev	AWO #	Description	Date	Appr
-		RELEASED	8/19/05	

APPROVED: _____

DATE: _____ TITLE: _____

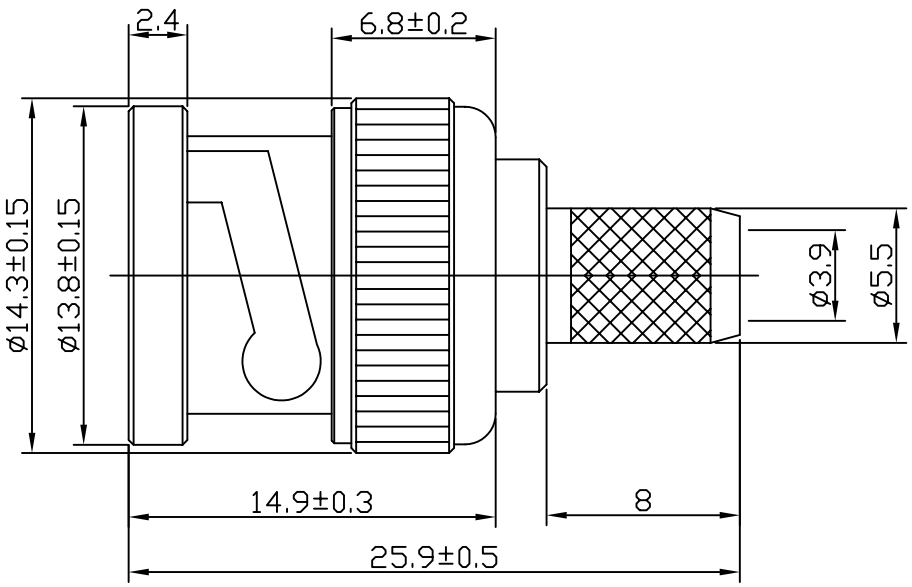

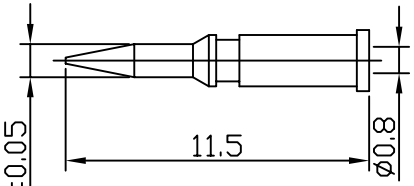

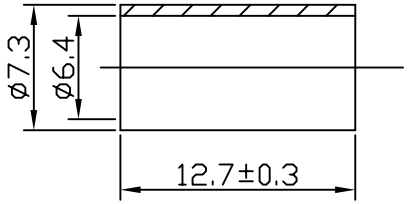

NO	DESCRIPTION	MATERIAL	FINISH	QTY
3	SLEEVE	BRASS	NICKEL	1
2	CENTER CONTACT	BRASS	GOLD	1
	BODY	ZINC	NICKEL	1
	WASHER	IRON	NICKEL	1
	SPRING	65Mn	NONE	1
1	OUT CONTACT	ZINC	NICKEL	1
	RUBBER WASHER	PVC	NONE	1
	INSULATOR	POM	NONE	1
	SHELL	ZINC	NICKEL	1

ELECTRICAL:
Frequency range: 0–4 GHz
Voltage rating: 500 Volts AC
VSWR: 1.2 max 0–2 GHz
Impedance: 75 **OHMS**
Environmental:
Lead free, RoHS compliant.

RoHS COMPLIANT

UNLESS OTHERWISE SPECIFIED
ALL DIMENSIONS ARE INCHES [MM]
TOLERANCES: EXCEPT AS NOTED

INCHES		HOLES	
.X	± .10	Ø.X	±.10
.XX	± .020	Ø.XX	±.015
.XXX	± .015	Ø.XXX	±.010

APPROVALS		DATE
DRAWN	SS	8/19/05
CHECKED		
APPROVED		

ADAM TECH
909 Rahway Avenue, Union, NJ 07083
Phone: 908-687-5000 Fax: 908-687-5710

TITLE: BNC MALE CRIMP

SIZE	PART NO.	REV.
X	RF1-03-D-04-75	-

REF: | SCALE: NTS | SHEET 1 OF 1