Rev	AWO #	Description	Date	Appr
-		RELEASED	9/25/20	

APPROVED: _____

DATE: _____ TITLE: _____

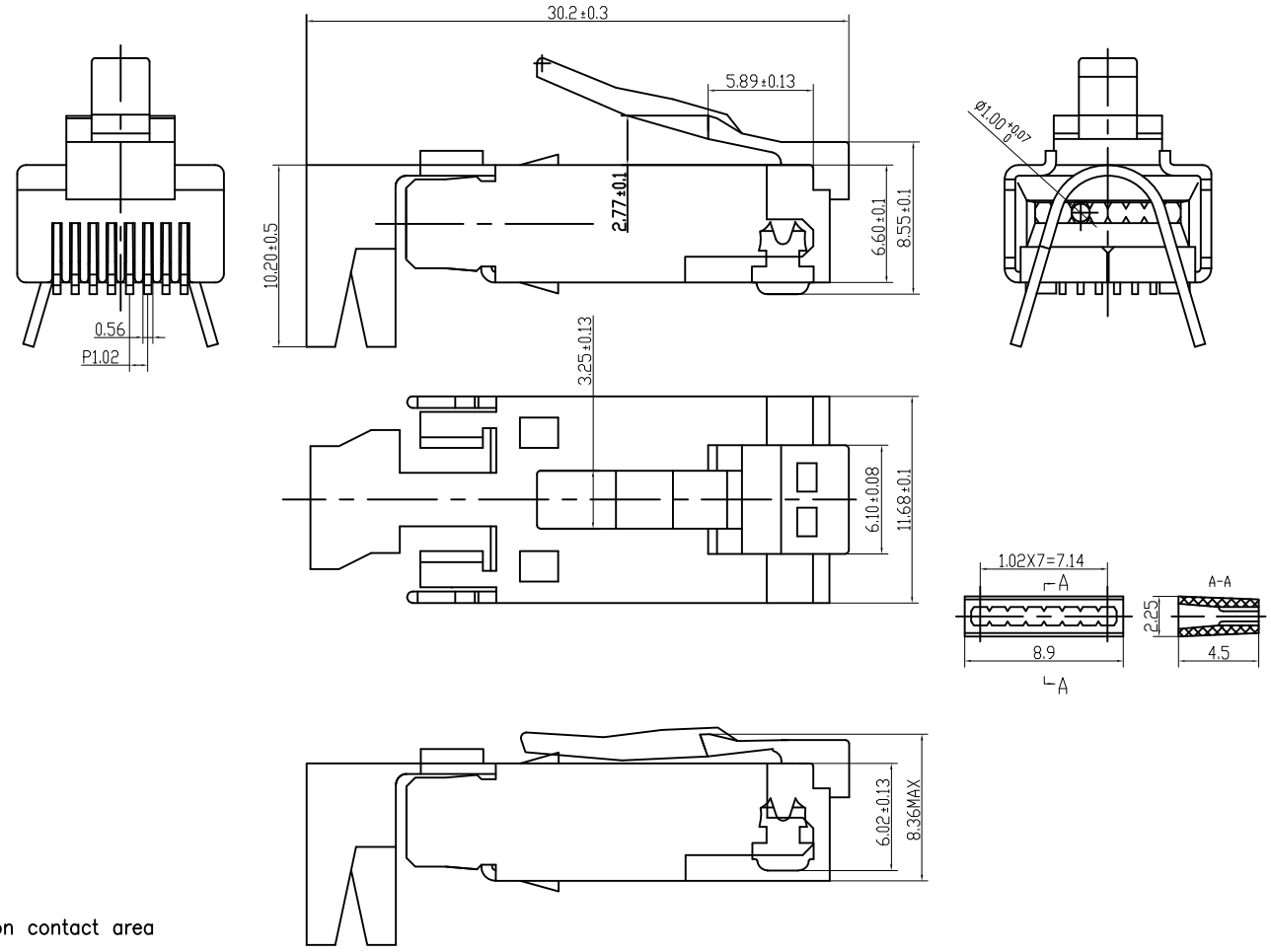

SPECIFICATIONS:
Material:
Insulator: PC, Color: Clear
Contacts: Copper Alloy
Plating:
Gold over Nickel underplate on contact area
Electrical:
Voltage rating: 150 VAC rms
Current rating: 1.5 Amp
Contact resistance: 20 mohms max
Insulation resistance: 1000 Mohms min @ 500 VDC
Dielectric withstanding voltage:
Contact to Contact: 1,000 VDC or AC Peak for 1 minute
Contact to Shield: 1,500 VDC or AC Peak for 1 minute
Mechanical:
Wire range: 24~26AWG, ø0.89mm~0.99mm
Temperature Rating:
Operating temperature: −25˚C to +55˚C
Environmental:
Lead free, RoHS compliant.

RoHS COMPLIANT

" X "	PLATING
X	Gold flash
U	15 µin Gold
W	30 µin Gold
G	50 µin Gold

UNLESS OTHERWISE SPECIFIED
ALL DIMENSIONS ARE MILLIMETERS
TOLERANCES: EXCEPT AS NOTED

MM		ANGLE
0~15	± 0.15	± 1˚
15~30	± 0.20	
30~	± 0.25	

APPROVALS		DATE
DRAWN	LH	9/25/20
CHECKED	AY1	9/25/20
APPROVED		

ADAM TECH
909 Rahway Avenue,
Union, NJ 07083
Phone: 908-687-5000
Fax: 908-687-5710

TITLE
MODULAR TELEPHONE PLUG, 8P8C, CAT5

SIZE	PART NO.	REV.
X	MTP-88-X-EMI-SP1	-

REF: S00005C | SCALE: NTS | SHEET 1 OF 1