| Rev | AWO # | Description | Date | Appr |
|---|---|---|---|---|
| - | | RELEASED | 9/3/15 | |

APPROVED: _____

DATE: _____ TITLE: _____

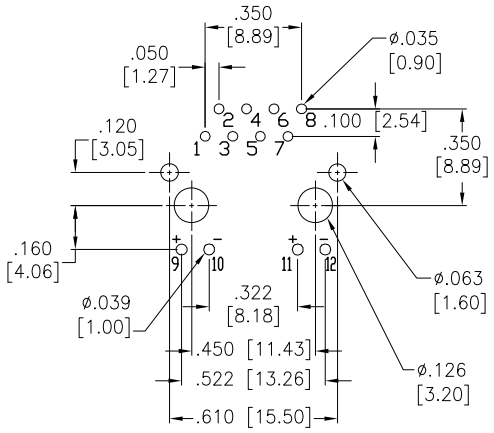


RECOMMENDED PCB LAYOUT

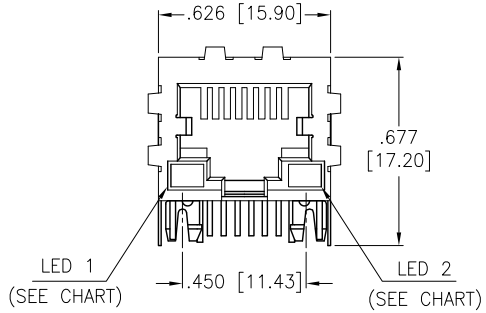


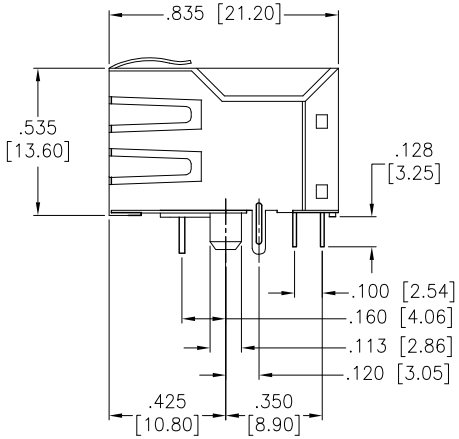


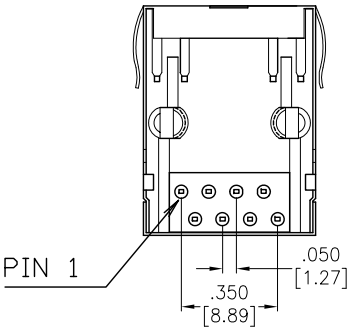


| Part Number | LED 1 Color | LED 2 Color |
|---|---|---|
| MTJ-88GX1-FSD-PG-LD | Green | Green |
| MTJ-88GX1-FSD-PG-LG | Yellow | Green |
| MTJ-88GX1-FSD-PG-LH | Green | Yellow |
| MTJ-88GX1-FSD-PG-LP | Yellow/Green | Yellow/Green |
| MTJ-88GX1-FSD-PG-LV | Green | Yellow/Green |
| MTJ-88GX1-FSD-PG-L16 | Green/Yellow | Green/Yellow |

SPECIFICATIONS:
Material:
Insulator: PBT, Glass reinforced rated UL 94V-0
Insulator color: Black
Contacts: Phosphor Bronze
Shield: Copper Alloy, Nickel plated
Cantacts Plating:
Flat contact
Gold over Nickel underplate on contact area,
Tin over Copper underplate on solder tails
Round contact
Electrical:
Operating voltage: 150 VAC max
Current rating: 1.5 Amps max
Contact resistance: 20 mohms max
Insulation resistance: 500 Mohms min @ 500 VDC
Dielectric withstanding voltage: 1500 VAC for 1 minute
Temperature Rating:
Operating temperature: -40°C to +85°C
Environmental:
Lead free, RoHS compliant.

RoHS COMPLIANT

UNLESS OTHERWISE SPECIFIED
ALL DIMENSIONS ARE INCHES [MM]
TOLERANCES: EXCEPT AS NOTED

| INCHES | | HOLES | |
|---|---|---|---|
| .X | ± .10 | Ø.X | ±.10 |
| .XX | ± .020 | Ø.XX | ±.015 |
| .XXX | ± .015 | Ø.XXX | ±.010 |

| APPROVALS | | DATE |
|---|---|---|
| DRAWN | AY | 9/3/15 |
| CHECKED | NC | 9/3/15 |
| APPROVED | | |


**ADAM TECH**
909 Rahway Avenue, Union, NJ 07083
Phone: 908-687-5000 Fax: 908-687-5710


TITLE: MODULAR JACK GANGED, 1 PORT, 8P8C W/ LED's

| SIZE | PART NO. | REV. |
|---|---|---|
| X | MTJ-88GX1-FSD-PG-LX | - |

REF: S00065T | SCALE: NTS | SHEET 1 OF 1