Rev	AWO #	Description	Date	Appr
-		RELEASED	05/26/04	
A		UPDATE DRAWING	1/19/18	AY/LW

APPROVED: _____

DATE: _____ TITLE: _____

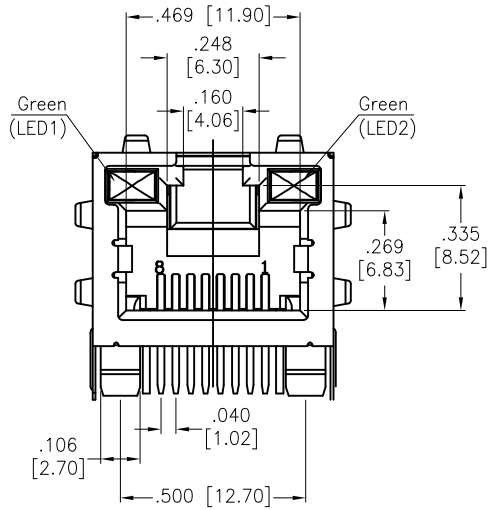

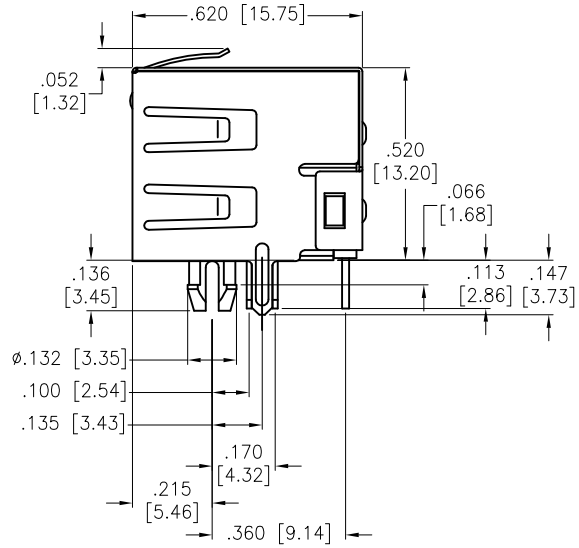

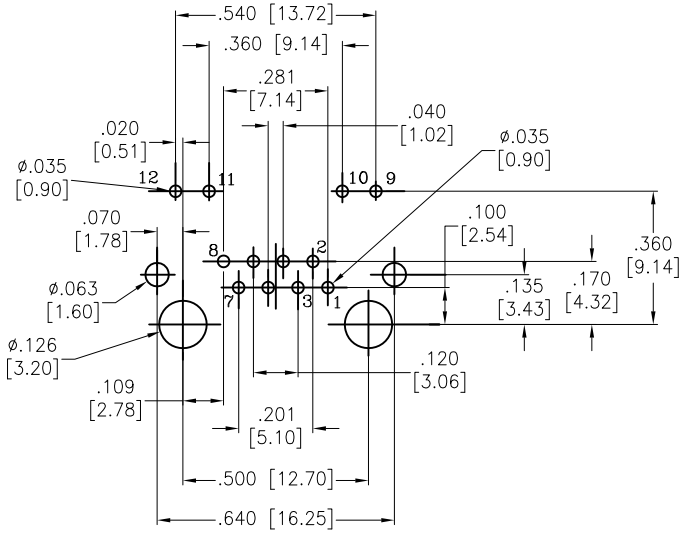

RECOMMENDED PCB LAYOUT

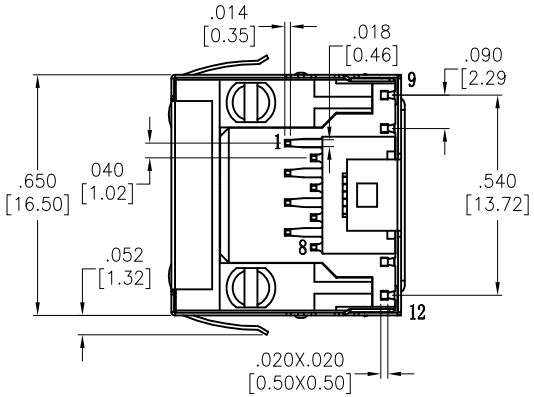

SPECIFICATIONS:
Material:
Insulator: PBT, glass reinforced, rated UL 94V–0
Insulator color: Black
Contacts: Phosphor Bronze
Shield: Brass, Nickel plated
Cantacts Plating:
Round contact
Gold over Nickel underplate overall
Flat contact
Gold over Nickel underplate on contact area,
Tin over Nickel underplate on solder tails
Electrical:
Voltage rating: 150 VAC rms
Current rating: 1.5 Amps max
Contact resistance: 20 mohms max
Insulation resistance: 1,000 Mohms min @ 500 VDC
Dielectric withstanding voltage: 1,000 VAC for 1 minute (contact to contact)
1,500 VAC for 1 minute (contact to screen and test panel)
Temperature Rating:
Operating temperature: –40˚C to +85˚C
Environmental:
Lead free, RoHS compliant.

RoHS COMPLIANT

UNLESS OTHERWISE SPECIFIED
ALL DIMENSIONS ARE INCHES [MM]
TOLERANCES: EXCEPT AS NOTED

INCHES		HOLES	
.X	± .10	Ø.X	±.10
.XX	± .020	Ø.XX	±.015
.XXX	± .015	Ø.XXX	±.010

APPROVALS		DATE
DRAWN	BAS	05/26/04
CHECKED		
APPROVED		

ADAM TECH INTERCONNECTS
909 Rahway Avenue,
Union, NJ 07083
Phone: 908-687-5000
Fax: 908-687-5710

TITLE
MODULAR TELEPHONE JACK, W/ PANEL GROUNDS, LED1 GREEN / LED2 GREEN

SIZE	PART NO.	REV.
X	MTJ-88ARX1-FSM-PG-LD	A

REF: S00005C | SCALE: NTS | SHEET 1 OF 1