APPROVED: _____

DATE: _____ TITLE: _____

Rev	AWO #	Description	Date	Appr
-		RELEASED	10/4/04	
A		UPDATED TITLE	9/25/06	
B		REDRAWN	11/18/10	
C		REVISED DIM.	12/30/13	AY
D		UPDATED SPEC.	11/14/16	HR/CT
E		UPDATED DRAWING	8/1/18	HR/TW

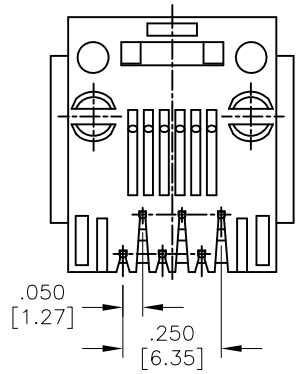

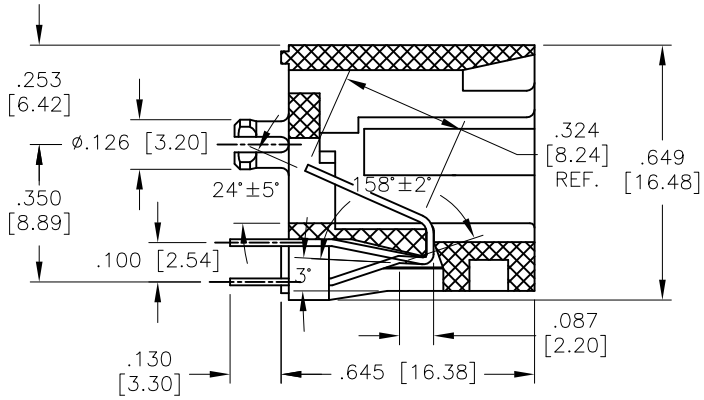

SECTION A–A

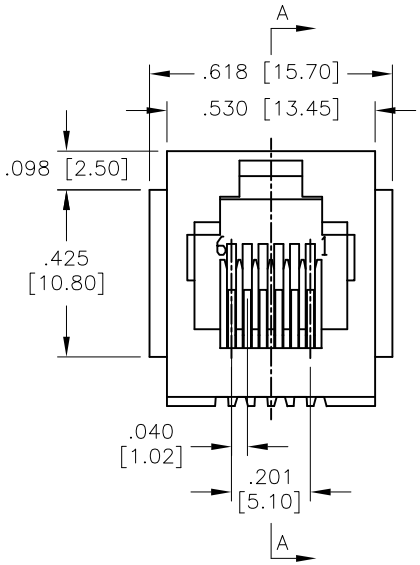

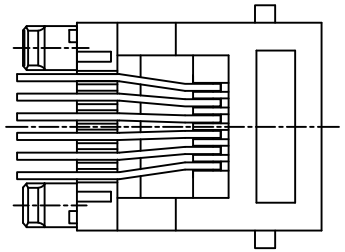

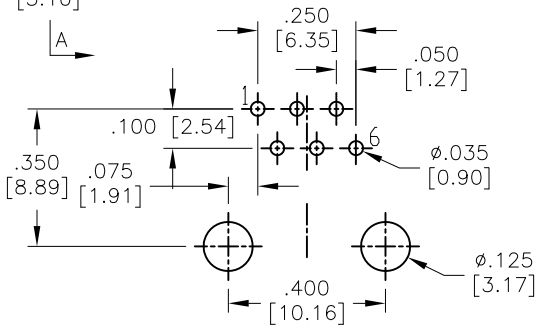

RECOMMENDED PCB LAYOUT

SPECIFICATIONS:

Material:

Insulator: PBT, rated UL 94V–0

Insulator color: Black

Contacts: Phosphor Bronze

Plating:

Round contact

Gold over Nickel underplate overall

Flat contact

Gold over Nickel underplate on contact area,

Tin over Nickel underplate on solder tails

Electrical:

Voltage rating: 150 VAC RMS

Current rating: 1.5 Amp

Contact resistance: 20 mohms max

Insulation resistance: 1000 Mohms min @ 500 VDC

Dielectric withstanding voltage:

1000 VAC/DC (Contact to Contact)

1500 VAC/DC (Contact to Screen & Test Panel) for 1 minute

Temperature Rating:

Operating temperature: –40°C to +85°C

Environmental:

Lead free, RoHS compliant.

RoHS COMPLIANT

UNLESS OTHERWISE SPECIFIED
ALL DIMENSIONS ARE INCHES [MM]
TOLERANCES: EXCEPT AS NOTED

INCHES		HOLES	
.X	± .10	Ø.X	±.10
.XX	± .020	Ø.XX	±.015
.XXX	± .015	Ø.XXX	±.010

APPROVALS		DATE
DRAWN	SS	10/4/04
CHECKED		
APPROVED		

ADAM TECH INTERCONNECTS

909 Rahway Avenue,
Union, NJ 07083
Phone: 908-687-5000
Fax: 908-687-5710

TITLE

MODULAR TELEPHONE JACK, 6P6C
VERTICAL TOP ENTRY, PCB

SIZE	PART NO.	REV.
X	MTJ-663X1	E

REF: S00005C | SCALE: NTS | SHEET 1 OF 1