Rev	AWO #	Description	Date	Appr
-		RELEASED	10/23/07	
A		REDRAWN	5/11/12	

APPROVED: _____

DATE: _____ TITLE: _____

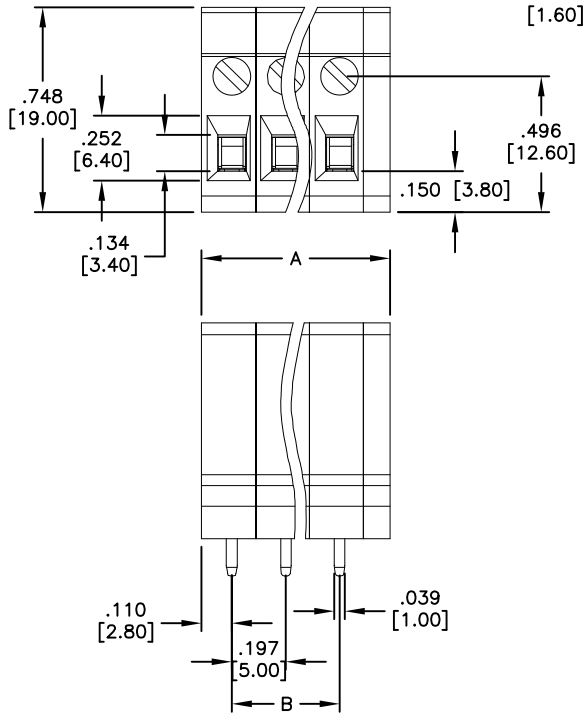

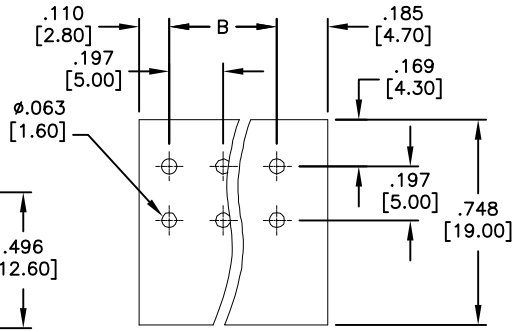

RECOMMENDED PCB LAYOUT

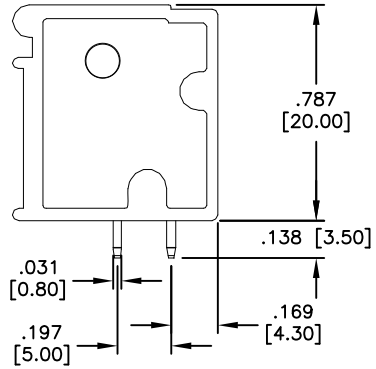

SPECIFICATIONS:
Material:
Insulator: NY66, rated UL 94V–0
Insulator color: Green
Contact: Brass, Tin plated
Screw: Steel, M2.5/Zn plated
Electrical:
Operation voltage: 300 VAC
Current rating: 20 Amps
Withstanding Voltage: 1.6KV
Mechanical:
Solid wire(AWG): 12–22
Stranded wire(AWG): 12–22
Torque(Lb–In): 2.4
Wire strip length(mm): 10–11
Temperature Rating:
Operating temperature: –40°C to +115°C
Environmental:
Lead free, RoHS compliant.

RoHS COMPLIANT

	Tolerance
2–6P	±.008 [0.20]
7–12P	±.010 [0.25]
13–18P	±.014 [0.35]
19–24P	±.016 [0.40]

Positions: 02 thru 24
A= .197 [5.00] x No. of Positions +.098 [2.50]
B= .197 [5.00] x No. of Spaces

UNLESS OTHERWISE SPECIFIED
ALL DIMENSIONS ARE INCHES [MM]
TOLERANCES: EXCEPT AS NOTED

INCHES		HOLES	
.X	± .10	Ø.X	±.10
.XX	± .020	Ø.XX	±.015
.XXX	± .015	Ø.XXX	±.010

APPROVALS		DATE
DRAWN	SS	10/23/07
CHECKED		
APPROVED		

ADAM TECH
909 Rahway Avenue, Union, NJ 07083
Phone: 908–687–5000 Fax: 908–687–5710

TITLE
EURO BLOCK, 5.0mm, RIGHT ANGLE
2 THRU 24 POLES

SIZE	PART NO.	REV.
X	EB7-XX-C	A

REF: S00007T | SCALE: NTS | SHEET 1 OF 1