Rev	AWO #	Description	Date	Appr
-		RELEASED	11/26/18	

APPROVED: _____

DATE: _____ TITLE: _____

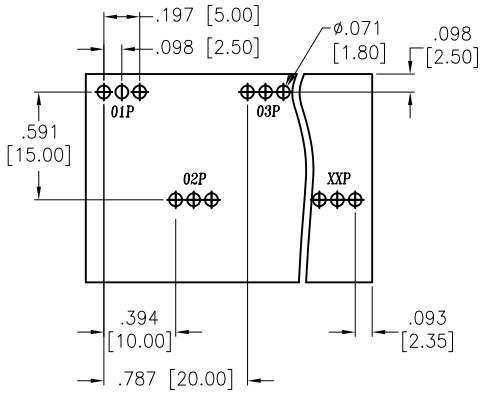

RECOMMENDED PCB LAYOUT

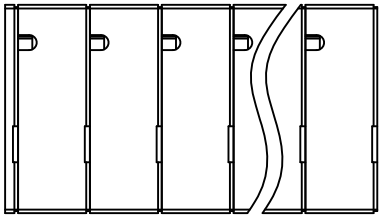

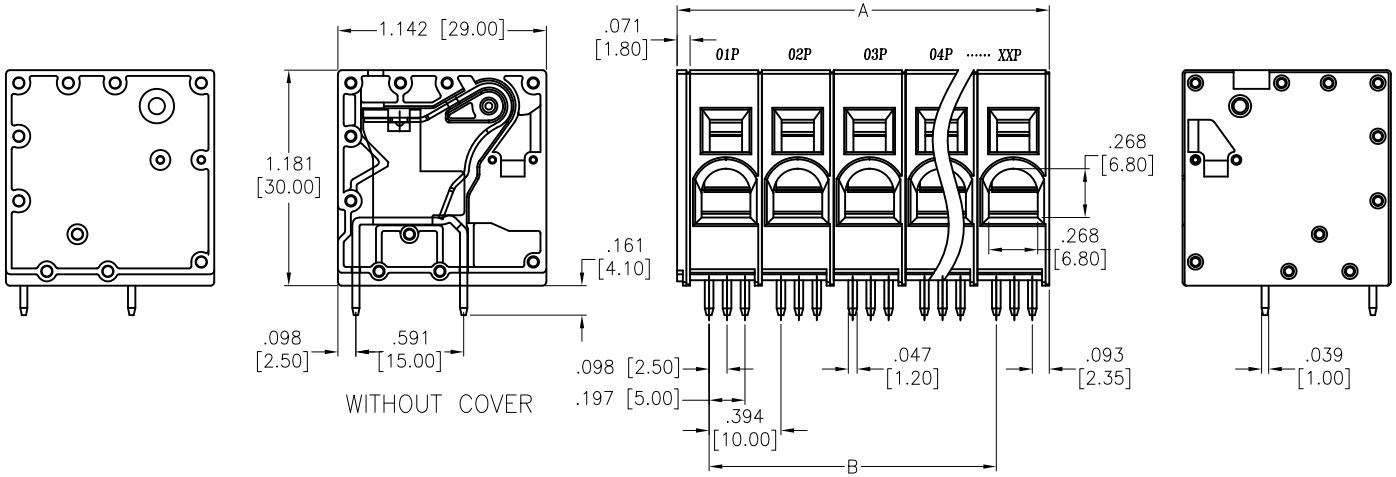

WITHOUT COVER

SPECIFICATIONS:

Material:
Insulator: PA, rated UL 94V–0
Insulator color: Green
Contact: Copper Alloy, Tin plated
Electrical:
Voltage rating: 600 V
Current rating: 66 A
Dielectric withstanding voltage: 2,200 VAC for 1 minute
Mechanical:
Strip length: 18~19mm
Wire Range: 4~18 AWG
Temperature Rating:
Operating temperature: –40°C to +105°C
Environmental:
Lead free, RoHS compliant.

RoHS COMPLIANT

Poles: 01 thru XXP
A = .394 [10.00] X No. of Positions +.071 [1.80]
B = .394 [10.00] X No. of Spaces

UNLESS OTHERWISE SPECIFIED
ALL DIMENSIONS ARE INCHES [MM]
TOLERANCES: EXCEPT AS NOTED

INCHES		HOLES	
.X	± .10	Ø.X	±.10
.XX	± .020	Ø.XX	±.015
.XXX	± .015	Ø.XXX	±.010

APPROVALS		DATE
DRAWN	AY	11/26/18
CHECKED	AC	11/26/18
APPROVED		

ADAM TECH INTERCONNECTS
909 Rahway Avenue,
Union, NJ 07083
Phone: 908-687-5000
Fax: 908-687-5710

TITLE

SPRING CLAMP EURO BLOCK, .394 [10.00] PITCH

SIZE	PART NO.	REV.
X	EB167A-XX-H	-

REF: S00067C | SCALE: NTS | SHEET 1 OF 1